✆ 1300 780 450

CBRVW4SC

Galvanised 32NB Light Duty Galvanised Pipe / Galvanised clamp fittings

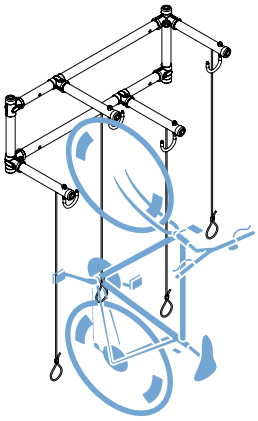

Wall Mounted
An easily assembled
wall mounted rack
(also available as a floor mounted)
using standard clamp-on pipe fittings.
Includes a step by step
instruction manual.

Front View

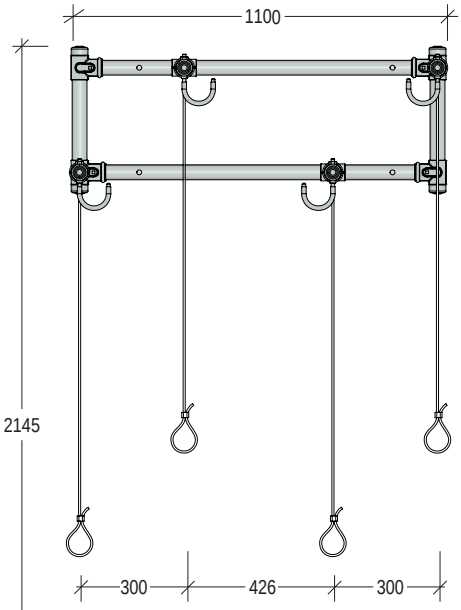

Side View

CBRV4SC

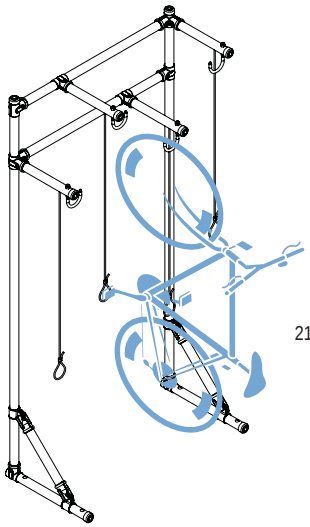
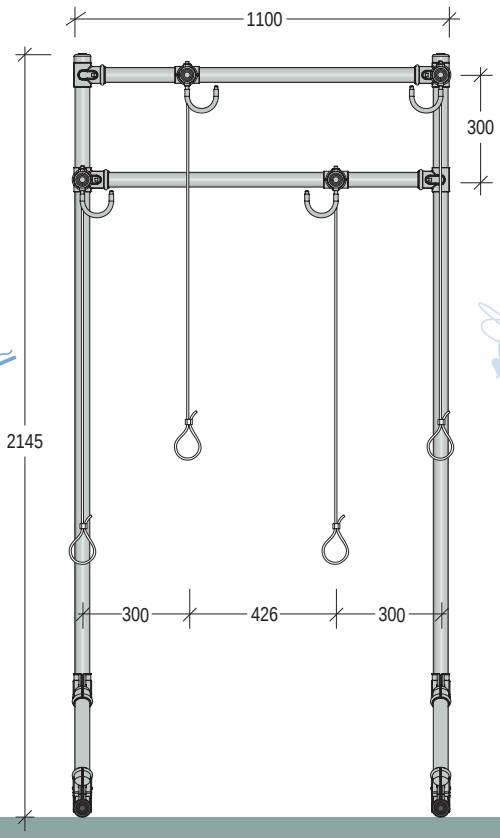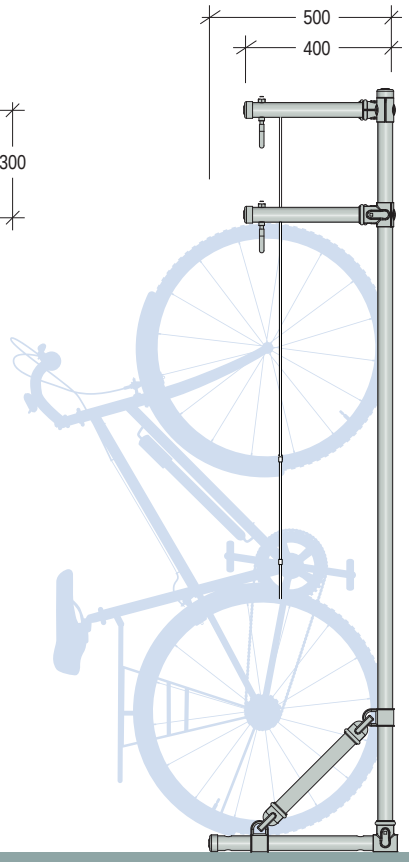
Floor Mounted
An easily assembled
floor mounted rack
(also available as a wall mounted)
using standard clamp-on pipe fittings.
Includes a step by step
instruction manual.