SecuraPost

Product Range

500+ bollard models | Designing security solutions

Handbook Edition VI 2017

Architectural & Security Bollards HANDBOOK

LEDA

SecuraPost
BY LEDA

LEDA is the name behind SecuraPost. Australia's largest manufacturer of architectural and security bollards.

With continuous innovation and a comprehensive range, SecuraPost remains Australia's market leader. Leda commenced operations in 1994 and has its main manufacturing plant located at Tuggerah NSW, about 90 kilometres north of Sydney. In early 2012 Leda opened its own factory and offices in Ningbo China to service sales there as well meeting demands in the Asian, European, North and South American markets.

DESIGN FOR INNOVATION

Leda has a dedicated design team continually working to develop innovative and attractive bollard designs that will also meet the required impact and technical specifications.

WE INSTALL

Leda arranges installation of many selected products to ensure they are located and installed correctly.

CONSULTING SERVICES

Leda assists the security industry as well as state and local governments with a range of consulting services.

QUALITY IS SERVICE

Leda works continually to improve the effectiveness and efficiency of all its products. When selecting or specifying from within this handbook, it is advisable to consult directly with Leda to ensure specifications have not been altered. Leda can also advise on the suitability of your SecuraPost selection for the proposed application.

BUILT TO PERFORM

All Leda products carry a full comprehensive 12 month warranty. Optional warranty extensions and programmed maintenance contracts are also available.

ACROSS AUSTRALIA

Sales and branch offices are located in Sydney, Melbourne, Brisbane, Adelaide and Perth, with distributors throughout Australia and New Zealand. Experienced sales staff will assist in ensuring you select the appropriate product and its suitability for your application.

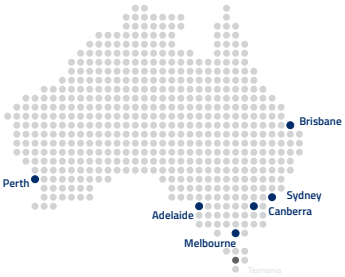

ledasecurity.com.au

LEDA

Architectural & Security Bollards Handbook, Edition VI

Copyright © Leda Security Products Pty Ltd 2017. All rights reserved. No part of this work may be produced or utilised in any form or by any means, electronic or mechanical, including photocopying, recording or in any information storage or retrieval system, without the prior written permission of Leda Security Products Pty Ltd.

INTRODUCTION	**1**
Bollards in the Environment	2
Materials	4
Styles	5
Applications Overview	6
ARCHITECTURAL RANGE	**8**
Range of Features & Applications	9
Installation	10
Stainless Steel	12
Aluminium	28
Timber	32
Pre-cast Concrete	35
Steel	42
Plastic	48
Lighting	52
SECURITY RANGE	**62**
Range of Features & Applications	63
Designing for Security	63
Impact Rating	65
Installation	68
Security Products	74
High Security Products	82
PAS Certified Products	88
RETRACTABLE RANGE	**98**
Range of Features & Applications	98
Hostile Vehicle Mitigation (HVM) Bollards	99
Vehicle Access Control (VAC) Bollards	107
INDUSTRIAL RANGE	**112**
Range of Features & Applications	112
Industrial Bollards	113
Power Distribution Bollards	124
Card Reader Bollards	128
General Products	134
OPTIONS & ACCESSORIES	**137**
Accessories Range	137
Painting & Finishing Options	141
Installation Options	142
INDEX	**144**
Product Codes	144

Bollards in the Environment

The increasing use of motor vehicles in urban environments demonstrates the need to install effective barrier systems which allow pedestrian flow while precluding vehicle encroachment. Bollards are exceptionally effective in that role.

Applications

- Building forecourts and perimeters
- Shopping centres and malls
- Government sites and utilities
- Industrial complexes
- Public and community areas
- Schools and university campuses
- Alfresco dining areas

With more than 500 models, Leda's Securapost bollard range is the largest and most comprehensive available.

Leda bollards are stylish, diverse, and are designed for a broad range of applications. And while aesthetics remain an important consideration in selecting a design,
it is also important to address pedestrian safety and property protection.

A busy thoroughfare with 60-80km/h traffic would understandably require bollards with a far higher impact rating than areas adjacent to carparks or pedestrian malls where vehicle speeds are restricted to about 10km/h or 20km/h.

Bollard Selection

Bollards have become an integral part of all new developments, so it is important that architects and specifiers select the appropriate product and impact resistance, while still achieving the aesthetic considerations for the site.

- Pedestrian delineation and separation
- Perimeter security
- Vehicle access control
- Ram raid protection
- Hostile vehicle mitigation

To assist in the selection process, the bollards in this Handbook have been divided into four categories:

Architectural Bollards
Security Bollards
Retractable Bollards
Industrial Bollards

Many models are available across security and non-security applications to allow continuity of bollard type throughout a project. Some architectural bollards – such as the Slimline stainless steel Lighting range – can also be manufactured to provide a security option.

Leda bollards are manufactured from a range of modern building materials, each providing different characteristics and functionality.

Materials

- Stainless Steel
- Aluminium
- Timber
- Pre-cast Concrete
- Steel
- Plastic

A range that offers architects and specifiers a wide collection of bollards from which to choose.

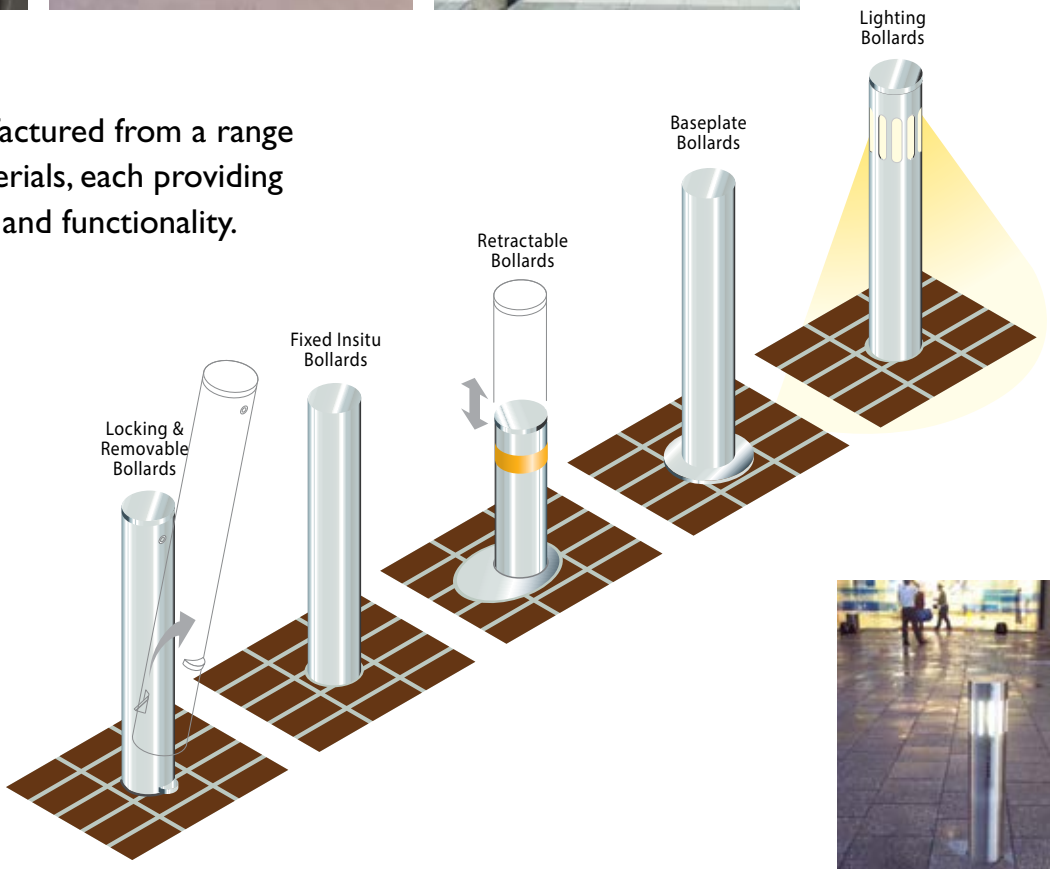

Continuity of Design

The full range of Slimline stainless steel bollard styles illustrated above allows continuity of design throughout a project.

> *Refer to p4-5 for more information on materials and styles.*

Leda bollards are manufactured from a diverse range of materials.

Security bollards are normally manufactured from stainless steel or steel, with a limited selection manufactured in pre-cast concrete.

Finishing

Leda maintains a high quality finish of product through its single-site production facilities – the largest purpose-built perimeter security manufacturing facility in the Asia-Pacific region. Wherever possible, Leda also endeavours to finish the majority of products in-house, allowing it to maintain its commitment to quality product throughout all phases of the production process.

Leda stainless steel bollards are normally manufactured from Grade 304, while Grade 316 is available if required or specified. Automatic linishing machinery allows polishing of all stainless steel to various industry standards. Electro-polishing is also available – this minimises the possibility of 'tea staining' and is recommended for corrosive and saltwater locations.

Leda's modern paintshop provides powder coating or wet spray (2 pack polyurethane) painting.

Protecta Clear

It is a clear polymer coating for all metal surfaces whether unpainted or painted. It provides protection from salt or chlorine corrosion, algae or tea staining and is now available as an option.

Stainless Steel

Clean smooth lines accentuating an ageless finish make stainless steel the architects' choice. Available in Grades 304 or 316, it is an attractive, durable, low maintenance and corrosive-resistant product that will last indefinitely.

Aluminium

Suitable for casting into both traditional and modern shapes. Aluminium provides an excellent surface for electrostatic powder coated finishes.

Timber

The world's traditional building material is featured in large round and square profiles using natural hardwoods such as spotted gum. Especially popular with designers and architects wishing to enhance nautical and 'eco' themes in their projects.

Pre-cast Concrete

Their substantial bulk provides a greater visual deterrent than other bollards while providing an attractive and durable alternative for landscape architects. The range includes round, square, spherical and pyramid shapes.
Some models are impact rated for security applications.

Steel

Heavy duty and extra heavy duty galvanised steel pipe in C350 Grade high strength steel is used in the majority of models. Functional, durable and featuring high impact resistance properties, steel also has the advantage of being particularly suited to powder coating in different colours and finishes.

Plastic

The Leda bollard range uses both virgin and 100% recycled plastic. Plastic is low maintenance, has vandal-resistant properties and is extremely long lasting. It is also used as replaceable sleeves in some models.

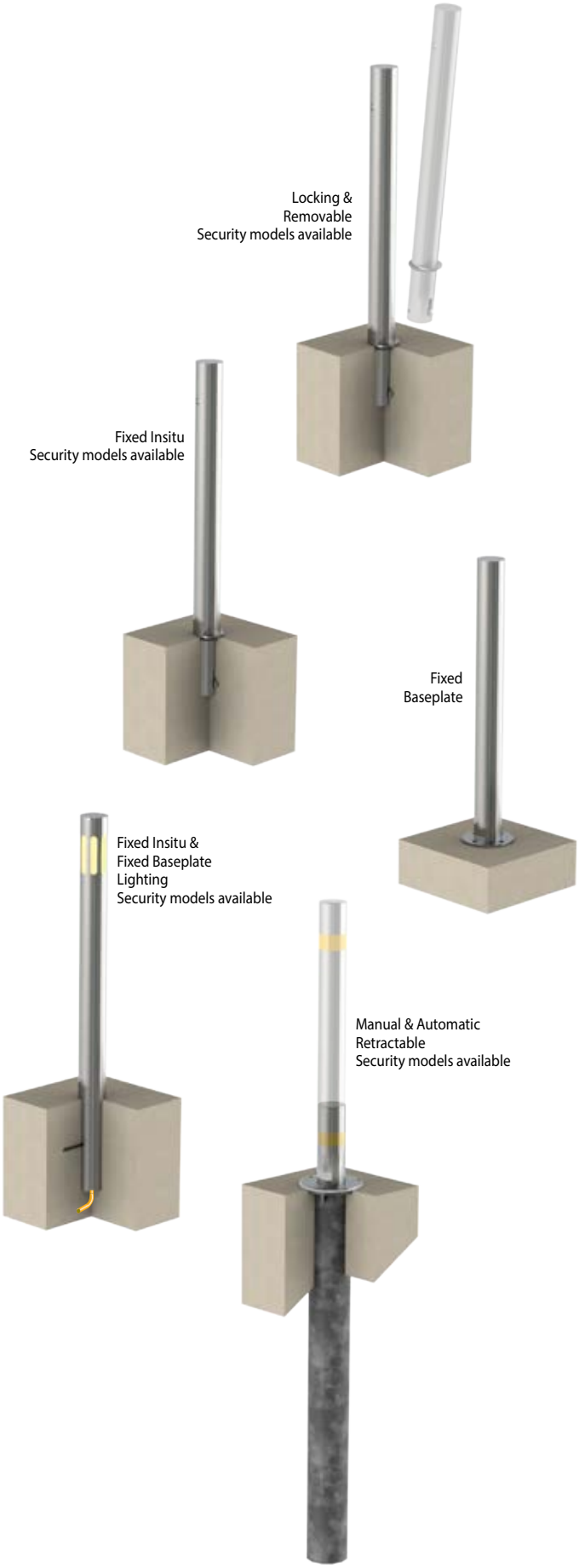

Leda bollards are designed in a number of styles to suit a range of applications and project designs.

Not all styles are manufactured in all materials. Security bollards are designed for high impact resistance and are not normally available in fixed baseplate models.

Locking & Removable

While all Leda bollards can be fixed permanently, the major feature of the range is the Locking & Removable bollard. This unique and patented feature (AP 624290) found only in the Leda range, allows easy removal and replacement of bollards. Keying is conveniently located at waist height.

Fixed Insitu

To provide optimum strength and impact resistance, it is important that the bollards be firmly embedded into the pavement. All Leda bollard designs cater for in-ground installation.
Fixed insitu bollards can also be epoxy-glued into core-drilled holes, providing an effective and economical installation method. If bollards are damaged, they can normally be removed and replaced easily without interference to the surrounding pavement.

Fixed Base Plate

While Leda manufactures and supplies base plate models, they are generally not recommended for use in conjunction with motor vehicles or in security applications. Ø12mm masonry anchors are normally used in the installation of these models, with very low impact resistance provided in the event of vehicular contact. They are most suited for use as a demarcation barrier or where shallow concrete depth precludes fixed insitu models.

Lighting

In order for architects and specifiers to utilise the same bollard design throughout a project, Leda has developed lighting bollards that not only carry the Leda style and appeal but are put together with security in mind. The vandal-resistant lighting range embraces stainless steel, steel and aluminium.

Retractable

Available in manual, semi-automatic and automatic models in a range of diameters and wall thicknesses to meet different security levels. Retractable bollards can operate at a 2-second raise and lower speed and finish flush with the surrounding pavement in the open position. They are ideal for vehicular access control including security applications.

Introduction > Applications Overview

1 Architectural Bollards
2 Security Bollards
3 Industrial Bollards
4 Camera Bollards
5 Lighting Bollards
6 Traffic Light Bollards
7 Street Sign Bollards
8 Card Reader Bollards
9 Smokers Bollards
10 Retractable Bollards

G Security Gates & Fences
Refer Industrial Gates & Perimeter Security Handbook

B Bicycle Rails, Racks & Lockers
Refer Bicycle Parking & Security Handbook

D Industrial Doors & Loading Docks
Refer Doors & Loading Dock Products Handbook

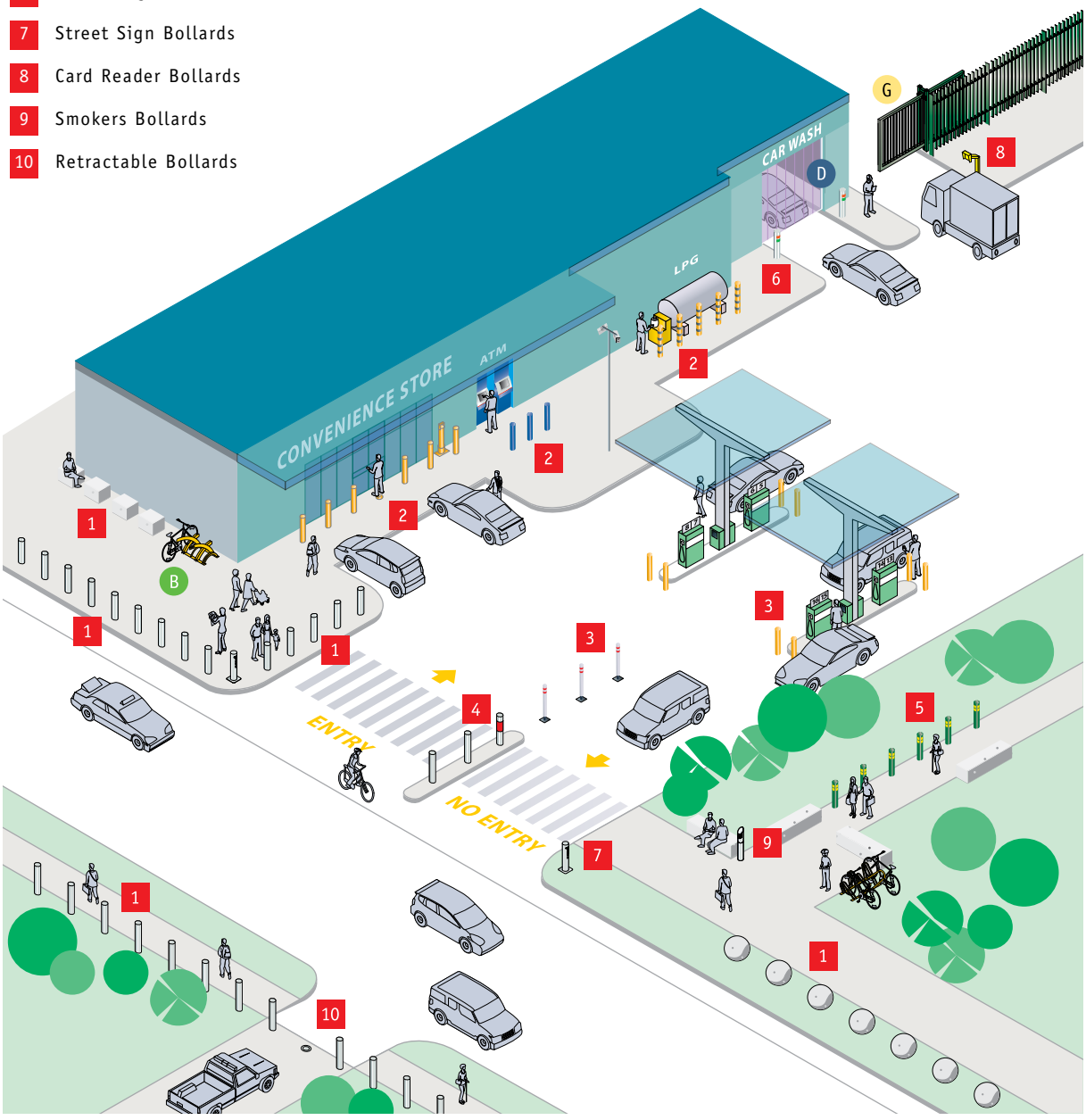

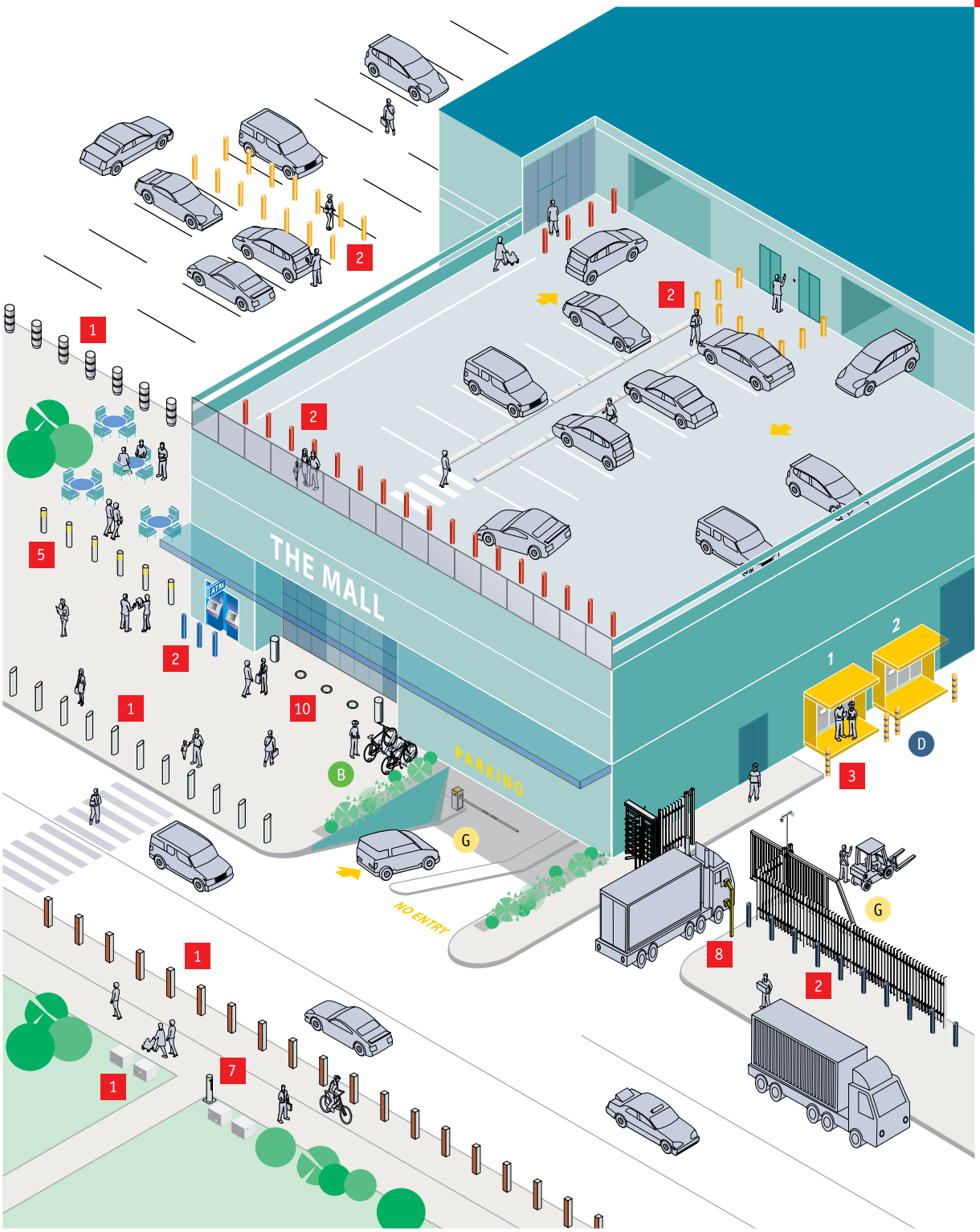
THE MALL
PARKING
NO ENTRY
ATM
1
2
3
5
7
8
10
B
D
G

ZARA

Architectural Bollards

Leda is the largest manufacturer and installer of bollards across Australia and offers the most comprehensive range of Architectural bollards available.

Leda *Architectural* bollards are stylish and diverse, and are manufactured in a range of materials.

You can specify Leda knowing you are guaranteed quality products that will complement your project.

While the majority of Leda *Architectural* bollards are not designed for security applications, their main purpose is to prevent the ingress or egress of vehicles or to protect pedestrians from vehicles. Consequently, it is important to identify what type of vehicles are likely to be encountered in particular applications.

These specially designed stainless steel bollards, manufactured for the entrance of the Westin Hotel in Sydney, required an extra special finish.

Introduction

While this handbook primarily displays the extensive range of models from which to choose we are also able to custom design or modify our extensive designs to suit the application or product.

This bronze logo was developed for the Stockland Group for use on bollards installed at their various shopping centres.

Sydney City Council logos are used by numerous local governments across Australia.

Intro 1
Architectural 8
Stainless 12
Aluminium 28
Timber 32
Pre-cast 35
Steel 42
Plastic 48
Lighting 52
Security 62
Designing 63
Impact Rating 65
Installation 68
Products 74
Retractable 98
HVM Bollards 99
VAC Bollards 107
Industrial 112
Bollards 113
Power 124
Card Readers 128
General 134
Accessories 137
Codes Index 144

IN-GROUND FIXED BOLLARDS

Installing bollards in non-security applications is not as critical as what is required for security installations, there are however, some basic guidelines that should be followed.

Concrete core drilling

Concrete core drilling is Leda's recommended method of bollard installation, providing the concrete slab is deep enough to provide a secure installation. Core drilling also allows quick and economical retro-fitting of bollards on existing sites. Cable detectors and X-ray equipment can be used where there is risk of striking underground cables or pipes.

Preferred by architects and building contractors, core drilling allows bollards to be installed accurately, quickly and economically towards the end of the project, ensuring that they are in pristine condition and do not restrict access during the building works.

Locking and Removable bollards are easily inserted into the snug-fitting hole after core drilling, and the latch groove formed to accommodate Leda's patented locking mechanism. You do not have to use a steel sleeve

Fixed Insitu bollards are epoxy glued into position after core drilling. While providing a permanent secure installation, damaged bollards can be removed and replaced (using a pipe wrench) without the need to dig up the concrete and disfigure the surface pavement.

Concrete footings

While reinforced concrete (RC) slabs are ideal for anchoring bollards in many applications, it may not always be possible, and reinforced concrete footings may be required.

While strip footings construction is a more expensive option than individual footings, it provides a more structurally sound solution and greater security.

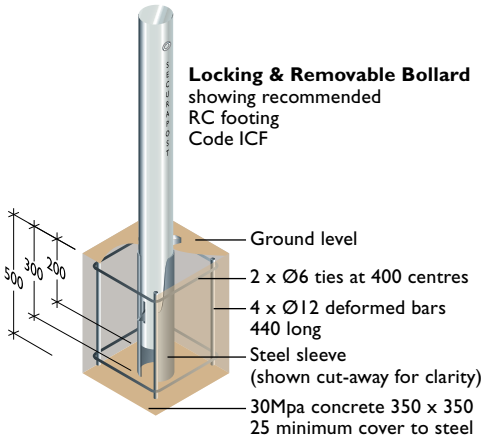

Locking & Removable Bollard
showing recommended
RC footing
Code ICF

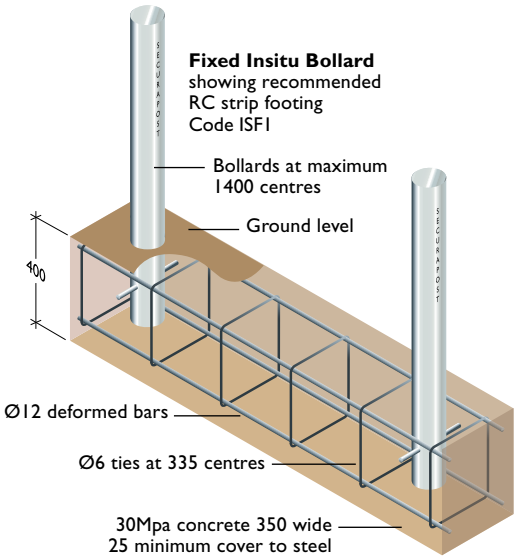

Fixed Insitu Bollard
showing recommended
RC strip footing
Code ISF1

Fixed Baseplate Bollards

Fixed baseplate bollards are fixed to the pavement surface using masonry or chemical anchors.

Baseplate fixed bollards do not offer the same protection from moving motor vehicles as those fixed in ground.

Unless otherwise specified, Leda baseplate bollards are manufactured using 8mm thick baseplates, drilled to accept Ø12mm masonry anchors.

Shallow Mount Fixed Bollards

When installing bollards on existing sites it may not always be possible to carry out civil works to lay the necessary concrete footings. This can be especially difficult when installing to existing high-profile sites. In many instances, excavation has to be manually dug around existing services which can be time consuming and expensive. On some sites, it may be impossible to obtain the required depth of footing required.

Leda has developed effective bollard anchoring methods for ease of installation on sites unable to accommodate standard depth footings.

Note: All footing designs should be subject to structural engineering certification.

Shallow Mount Bollard System

The Shallow Mount system allows installation of bollards in less than 200mm depth footings. The system is designed to cater for a range of vehicle impact loadings and is a cost-effective solution over conventional reinforced concrete footings.

> Shallow mount footings are dealt with in more detail on p70-72 in the Security section.

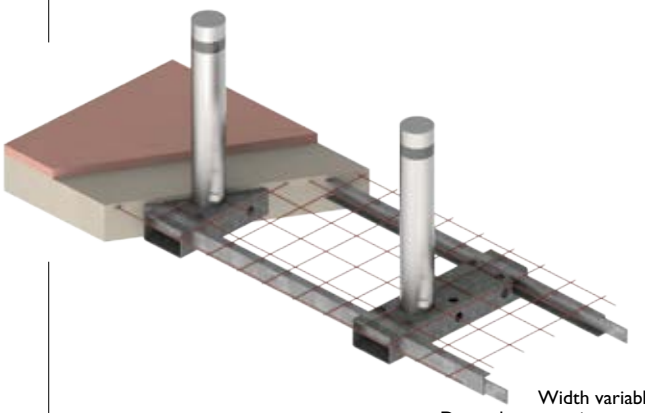

Width variable.
Dependant upon impact rating required

Suspended Slabs Bollard Installation

Where existing concrete slabs cannot be tampered with or baseplate bollards must be used, Leda's engineers have developed alternative anchoring systems to improve the impact performance of the bollards.

Type A. Large 10mm thick baseplate fitted to underside of the concrete slab.

Type B. This option allows the bollard to be embedded deeper with steel gussets supporting the underside of the baseplate.

Type C. Uses a sandwich panel approach which is very effective in distributing the load throughout the concrete slab.

While baseplate options shown are designed for 150NB pipe bollards, other diameters can be accommodated.

Type A
SSBP1

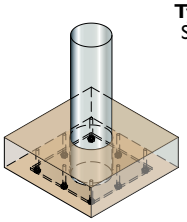

350 x 350 x 10mm plate

Type B
SSBP2

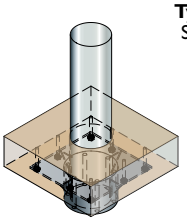

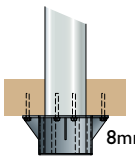

8mm gussets

Type C
SSBP3

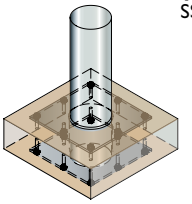

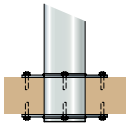

M12 chemical anchors

Stainless Steel

Leda manufactures two classic styles of stainless steel bollards – ***Slimline*** and ***Regal*** – in a array of sizes in either fixed or locking and removable. These aesthetically attractive bollards have, for many years, been the most widely used architectural bollards installed throughout Australia.

More recently, Leda's designers have developed the *Oval* range of bollards to complement the Slimline and Regal styles and provide architects and property developers with an alternative to a round profile.

Research conducted in the UK revealed that the narrowness of the oval bollard profile improved pedestrian traffic flow rates at shopping centres and sporting venues.

The Leda stainless steel range also includes an exciting selection of contemporary urban designs to suit various applications and projects.

Features

- Classic, clean smooth lines
- Range of sizes
- Linished or electropolished finish
- Choice of styles;
  - Fixed Insitu
  - Fixed Baseplate
  - Locking & Removable
  - Lighting (refer Lighting bollards)
  - Retractable (refer Retractable section).

Leda stainless steel bollards are normally manufactured from Grade 304 material. Grade 316 is available if specified, and is recommended for installations within 2 kilometres of the coast. Discolouration or 'tea staining' of stainless steel is often seen around coastal locations and can get progressively worse closer to the ocean, in higher temperatures or with exposure to wind. For these aggressive environmental conditions, Leda recommends electropolishing (pickling) as an alternative treatment and finish.

The electropolishing process involves immersing the finished stainless steel product in a nitric and hydrofluoride bath to pickle and passivate the metal surface and remove any contamination caused by the fabrication process.

While correct specifications and smoother surface finishes like electropolishing help minimise this staining, regular cleaning (2-3 times per year) of stainless steel surfaces is recommended.

Leda's *Care and Maintenance of Stainless Steel Products* provides a helpful guide to cleaning procedures and methods, and can be downloaded from the Leda website.

Oval

Slimline

Regal

Square

Rectangular

Many Slimline and Regal bollards are security rated, refer Impact Ratings Table on page 73.

Corso

Wave

Breeze

Smart Illuminated

Architectural Range > Stainless Steel

Oval Slimline

Material Grade 316 stainless steel / galvanised pipe
Finish Linished or electro-polished

Maximises pedestrian flows.
Ideal for sporting venues and shopping centres where high volumes of pedestrian traffic are possible.
Best suited for installations on flat pavement

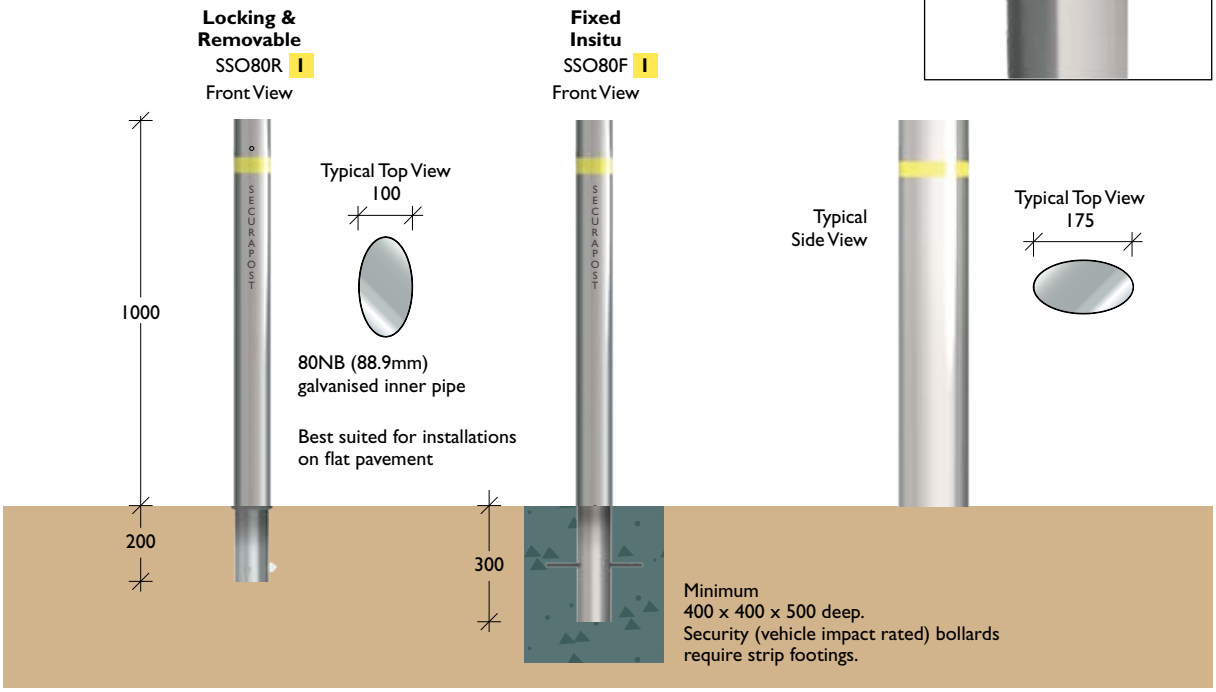

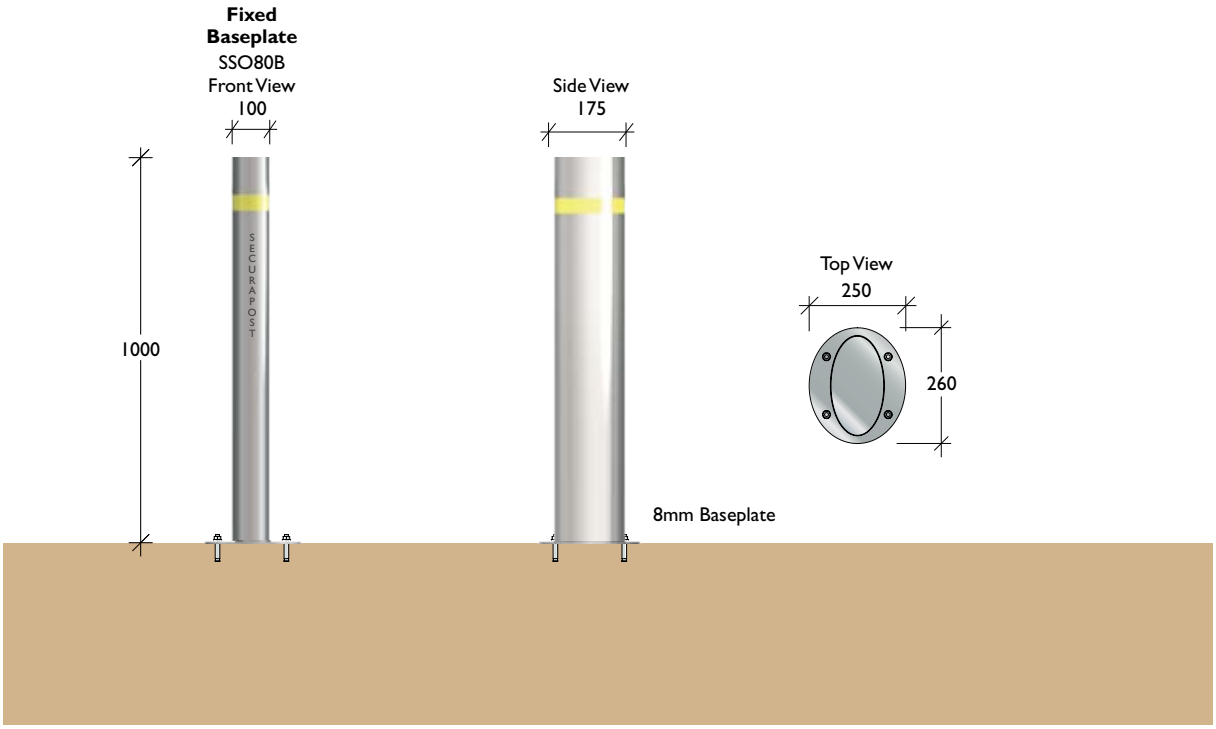

Oval Regal

Material Grade 316 stainless steel / galvanised pipe
Finish Linished or electro-polished

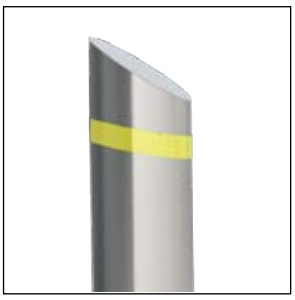

Maximises pedestrian flows.
Ideal for sporting venues and shopping centres where high volumes of pedestrian traffic are possible.
Best suited for installations on flat pavement

Locking & Removable
SRO80R I
Front View

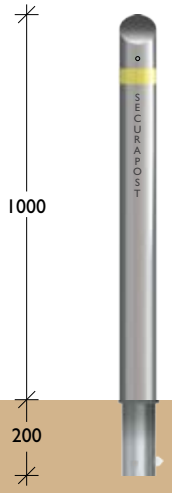

Typical Top View
100

80NB (88.9mm) galvanised inner pipe

Best suited for installations on flat pavement

Fixed Insitu
SRO80F I
Front View

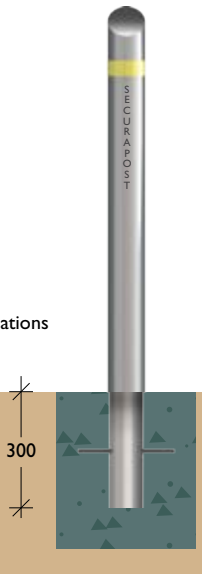

Minimum
400 x 400 x 500 deep.
Security (vehicle impact rated) bollards require strip footings.

Typical Side View

Typical Top View
175

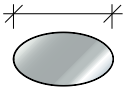

Fixed Baseplate
SRO80B
Front View
100

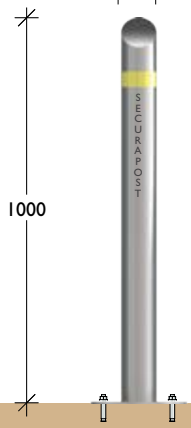

Side View
175

Top View
250

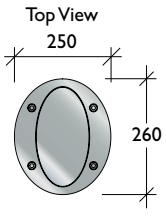

8mm Baseplate

Architectural Range > Stainless Steel

Slimline 80NB

Material 80NB (88.9) x 3.05 / 5.49 / 7.62mm Grade 304 stainless steel pipe
Finish Linished or electro-polished

***Slimline* bollards are the most popular and widely-used architectural bollards in Australia.**

Locking & Removable
SSP80R A3.05 I
SSP80R B5.49 I
SSP80R C7.62 I

Fixed Insitu
SSP80F A3.05 I
SSP80F B5.49 I
SSP80F C7.62 I

Internal Baseplate
SSB80B A

Screw-down
SSB80F A 3.05 I

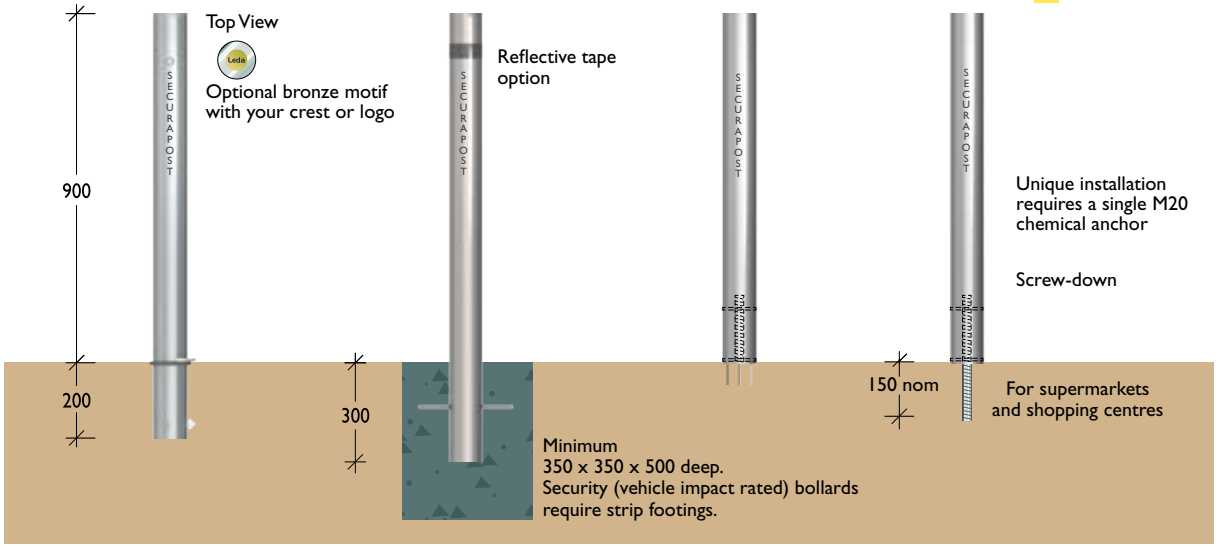

Locking & Removable
SSP80RAS3.05 I

Fixed Baseplate
SSP80B A

Retractable
Refer *Rectractable* section

Lighting
Refer *Lighting* section

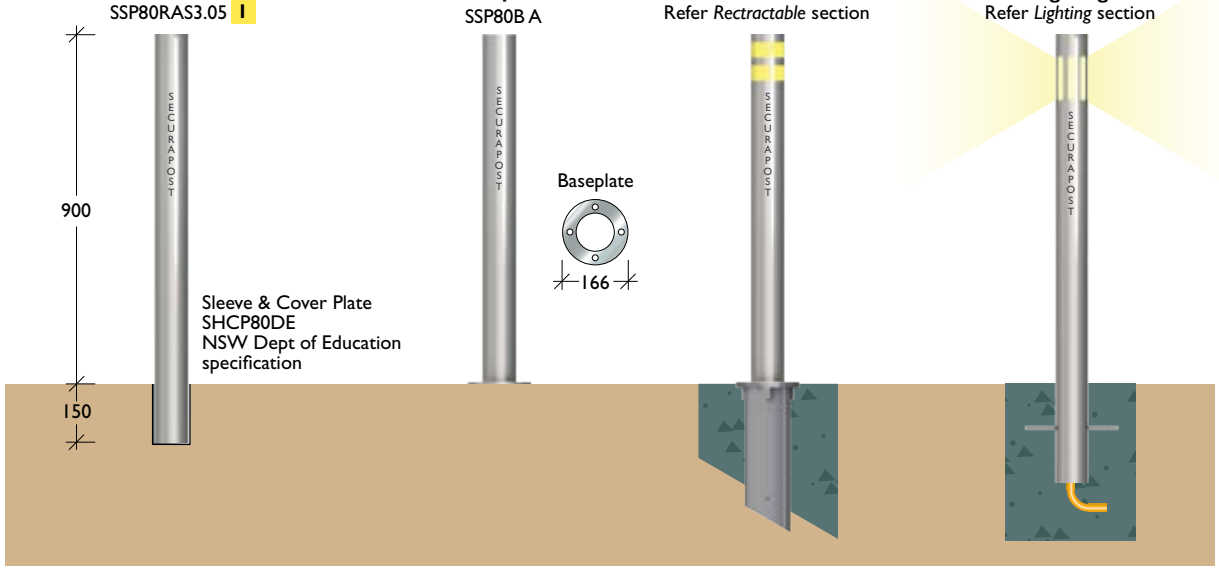

Slimline 80/100NB

Material 80NB (88.9) / 100NB (114.3) x 3.05mm Grade 304 s/steel pipe
Finish Linished or electro-polished

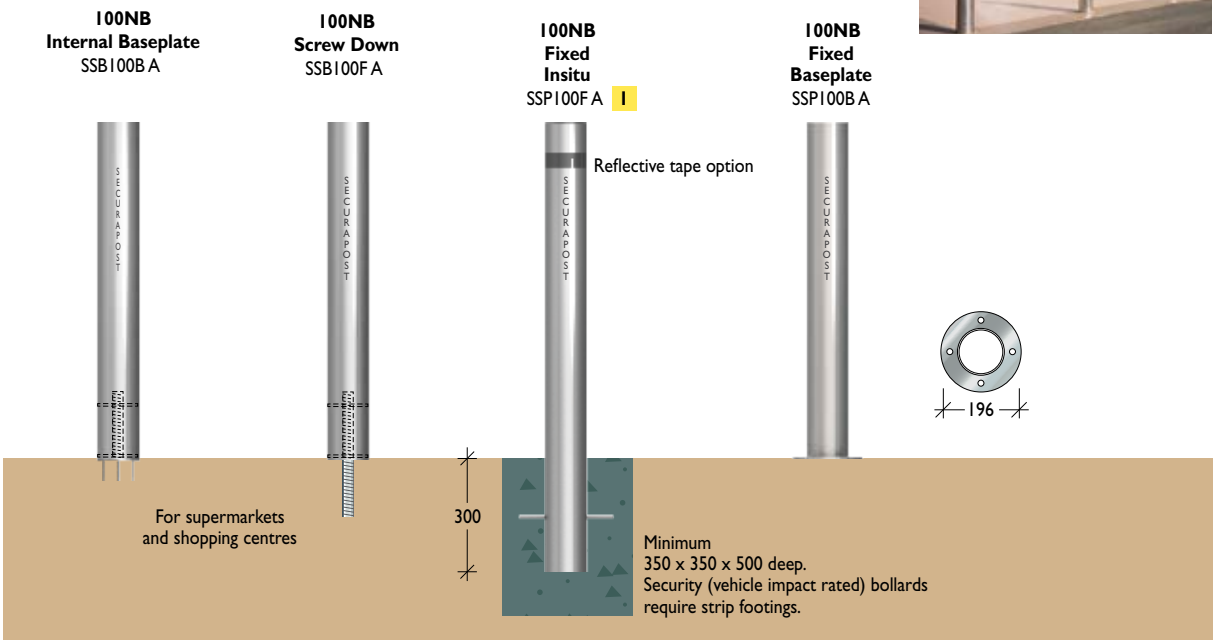

Slimline 125NB

Material 125NB (141.3) x 3.40mm Grade 304 s/steel pipe
Finish Linished or electro-polished

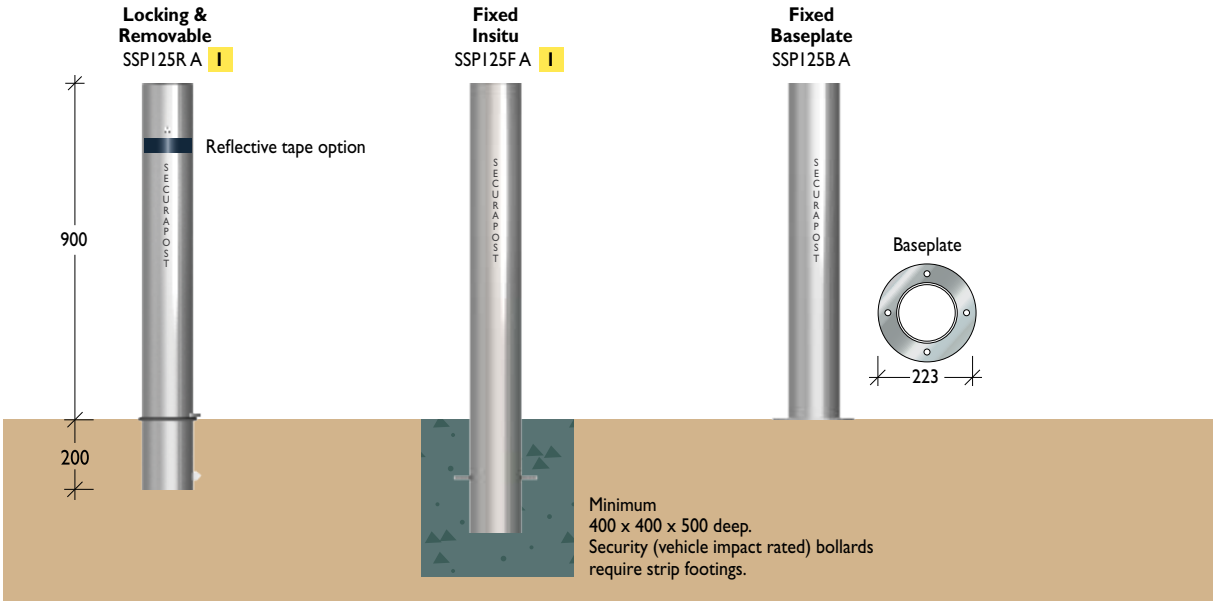

Architectural Range > Stainless Steel

Slimline 150NB

Material 150NB (168.3) x 3.40 / 7.11 / 10.97mm Grade 304 stainless steel pipe
Finish Linished or electro-polished

Locking & Removable
SSP150R A 3.40 1
SSP150R B 7.11 2
SSP150R C10.97 2

Fixed Insitu
SSP150F A 3.40 1
SSP150F B 7.11 2
SSP150F C10.97 2

Fixed Baseplate
SSP150B A

Supermarket Bollards
SSB150F A 3.40 1
SSB150B AWW 3.40 1

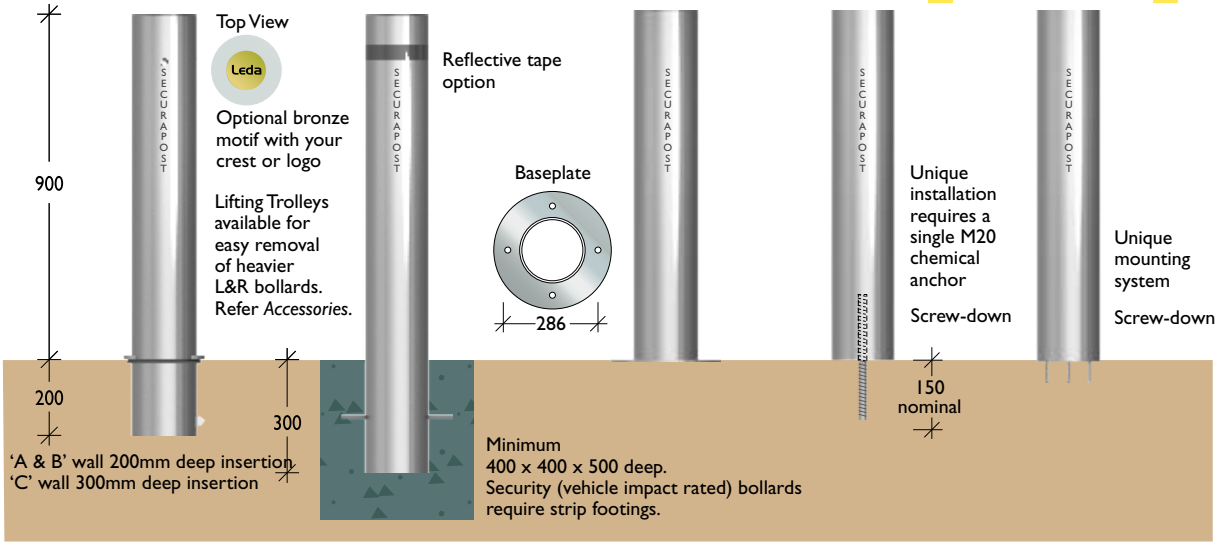

Fixed Insitu Traffic Lights
SSP150T A 3.40 1
SSP150T B 7.11 2
SSP150T C10.97 3

Lighting
Refer *Lighting* section.

Retractable
Refer *Retractable* section.

Stainless Steel Sleeves
Refer *Security* section

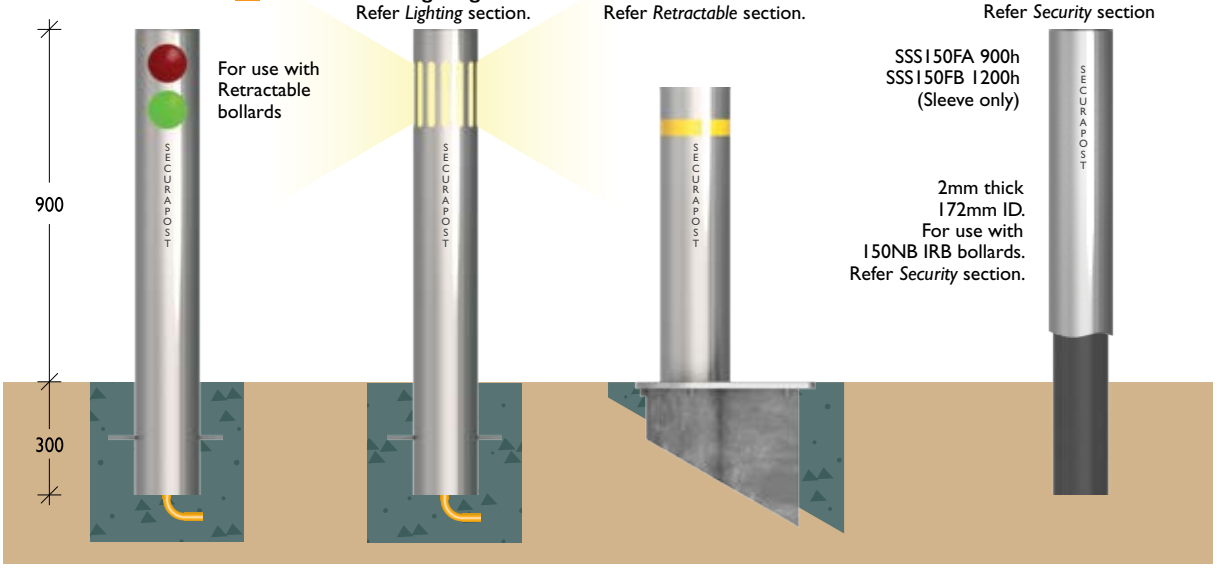

Slimline 200NB

Material 200NB (219.0) x 3.76 / 8.18 / 12.70mm Grade 304 stainless steel pipe
Finish Linished or electro-polished

Fixed Insitu
SSP200F A 3.76 2
SSP200F B 8.18 2
SSP200F C12.70 3

Top View

Optional bronze motif with your crest or logo

Fixed Baseplate
SSP200B A

Retractable
Refer *Security* section

Stainless Steel Sleeves
Refer *Security* section

SSS200FA 900h
SSS200FB 1200h
(Sleeve only)

For use with 200NB IRB bollards. Refer *Security* section.

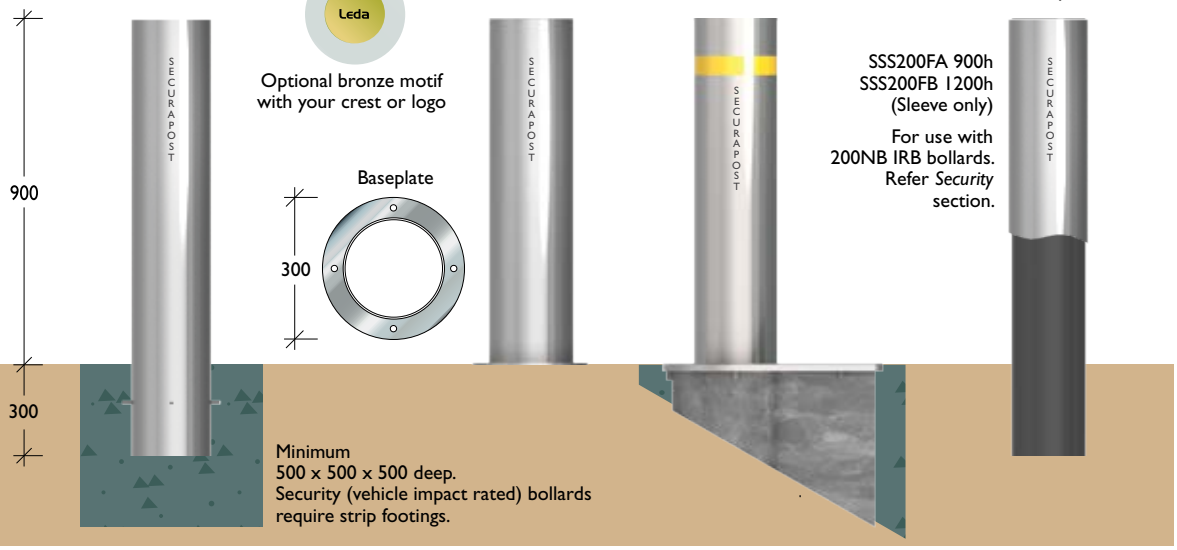

Minimum
500 x 500 x 500 deep.
Security (vehicle impact rated) bollards require strip footings.

Slimline 300NB

Material 300NB (323.4) x 4.57 / 9.53 / 12.70mm Grade 304 stainless steel
Finish Linished or electro-polished

Fixed Insitu
SSP300F A 4.57 2
SSP300F B 9.52 3
SSP300F C12.70 3

Top View

Optional bronze motif with your crest or logo

Fixed Baseplate
SSP300B A
SSP300B B

Stainless Steel Sleeves
Refer *Security* section

SSS300FA 900h
SSS300FB 1200h
(Sleeve only)

For use with 300NB IRB bollards. Refer *Security* section.

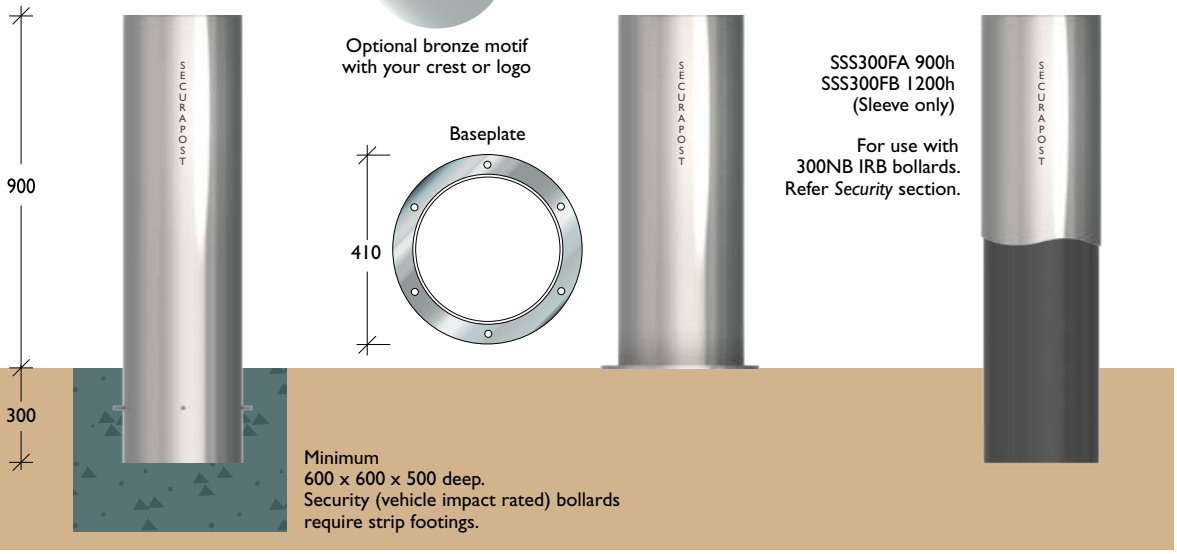

Minimum
600 x 600 x 500 deep.
Security (vehicle impact rated) bollards require strip footings.

Architectural Range > Stainless Steel

Regal 80NB

Material 80NB (88.9) x 3.05 / 5.49 / 7.62mm Grade 304 stainless steel pipe
Finish Linished or electro-polished

The *Regal's* sloping top stops rubbish placement and can also be used to house signage or branding.

Locking & Removable	Fixed Insitu	Fixed Baseplate	Screw-down Supermarket Bollard
SSR80R A3.05 I	SSR80F A 3.05 I	SSR80B A	SSRB80F A 3.05 I
SSR80R B5.49 I	SSR80F B 5.49 I		
SSR80R C7.62 I	SSR80F C7.62 I		

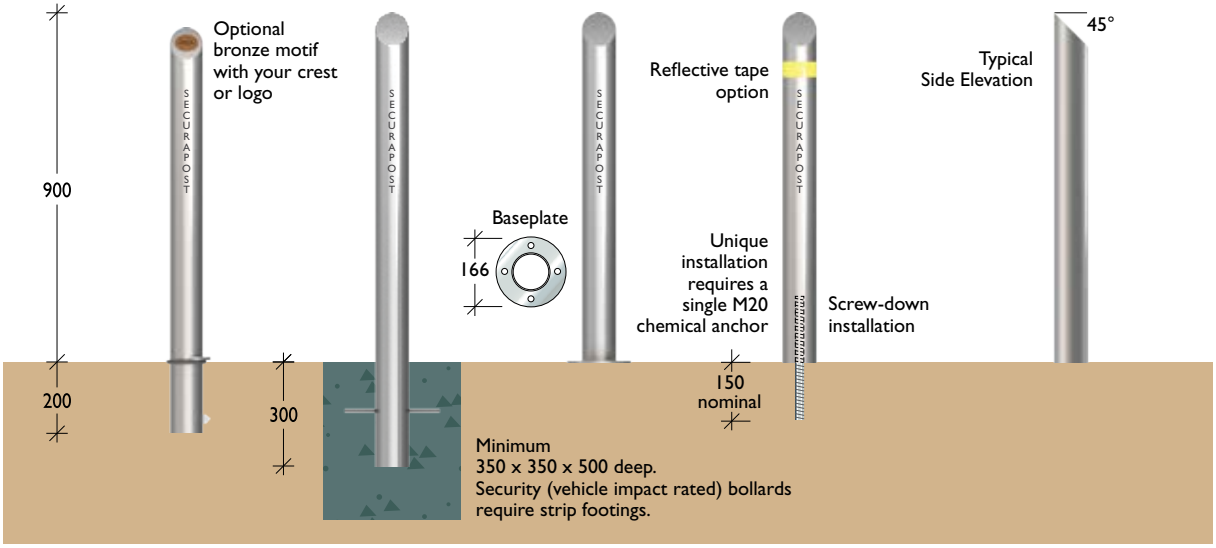

Regal 100NB

Material 100NB (114.3) x 3.05 mm Grade 304 stainless steel pipe
Finish Linished or electro-polished

Fixed Insitu	Fixed Baseplate
SSR100F A I	SSR100B A

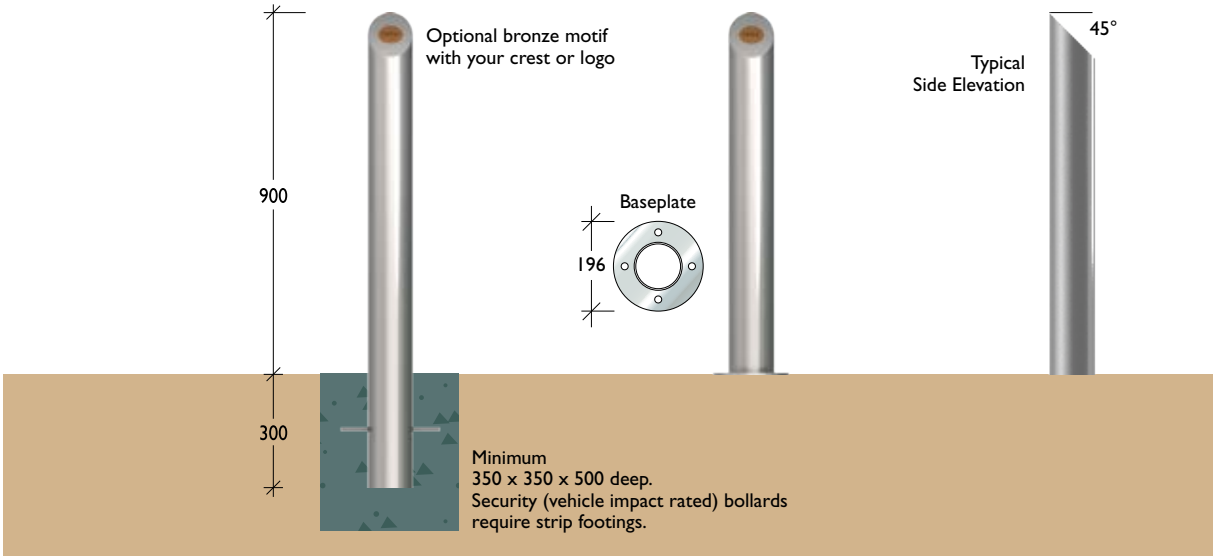

Regal 125NB

Material 125NB (141.3) x 3.40mm Grade 304 stainless steel pipe
Finish Linished or electro-polished

Locking & Removable
SSR125R A 1

Fixed Insitu
SSR125F A 1

Fixed Baseplate
SSR125B A

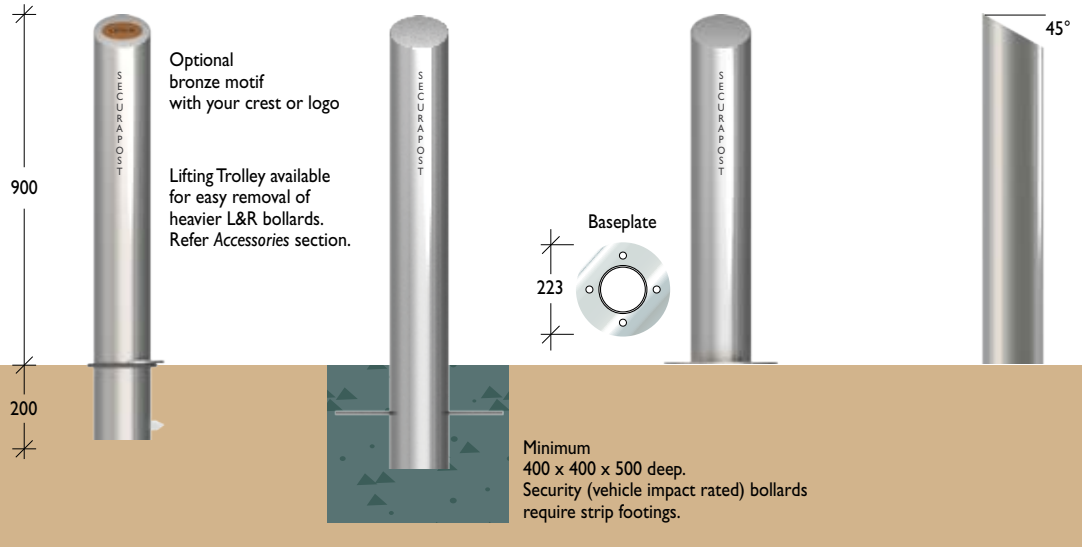

Regal 150NB

Material 150NB (168.3) x 3.40 / 7.11 / 10.97mm Grade 304 stainless steel pipe
Finish Stainless steel. Linished or electro-polished

Locking & Removable
Stainless Steel
SSR150R A 3.40 1
SSR150R B 7.11 1
SSR150R C 10.97 2

Fixed Insitu
Stainless Steel
SSR150F A 3.40 1
SSR150F B 7.11 1
SSR150F C 10.97 2

Fixed Baseplate
SSR150B A

Sleeve Stainless Steel
Refer *Security* section

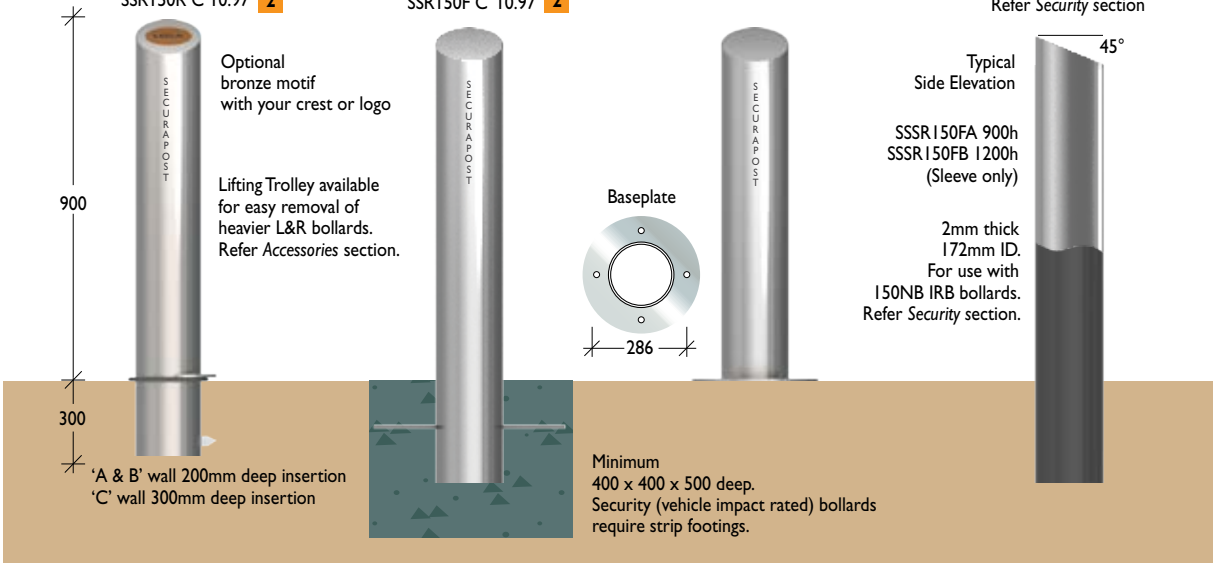

Architectural Range > Stainless Steel

Regal 200NB

Material 200NB (219.0) x 3.76 / 8.18 / 12.70mm Grade 304 stainless steel pipe
Finish Linished or electro-polished

Fixed Insitu
SSR200F A 3.76 2
SSR200F B 8.18 2
SSR200F C12.70 3

Stainless Steel Sleeves
SSSR200FA 900h
SSSR200FB 1200h
(Sleeve only)
For use with 200NB IRB bollards.
Refer *Security* section.

Fixed Baseplate
SSR200B A

Minimum
500 x 500 x 500 deep.
Security (vehicle impact rated) bollards require strip footings.

Regal 300NB

Material 300NB (323.4) x 4.57 / 9.53 / 12.70mm Grade 304 stainless steel pipe
Finish Linished or electro-polished

Fixed Insitu
SSR300F A 4.57 2
SSR300F B 9.52 3
SSR300F C12.70 3

Stainless Steel Sleeves
SSSR300FA 900h
SSSR300FB 1200h
(Sleeve only)
For use with 300NB IRB bollards.
Refer *Security* section.

Fixed Baseplate
SSR300B A

Minimum
600 x 600 x 500 deep.
Security (vehicle impact rated) bollards require strip footings.

BCC

Material 125NB (141.30mm) Grade 304 stainless steel plate
Finish 600 Grit linished

Fixed Baseplate
BCC01B
Front View

Brisbane City Council's
standard fixed bollard design

Top View

M16 dome nuts supplied

Wave / Breeze

Material 12mm Grade 304 stainless steel plate
Finish Linished or electro-polished

Fixed Baseplate
SSM152B
Front View

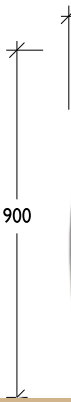

Side View

Fixed Baseplate
SSM151B
Front View

Side View

These designs are used with
a variety of stainless steel
or glass infill panels,
also lends itself
to balustrade applications.

Top View /
Baseplate

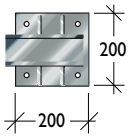

Architectural Range > Stainless Steel

Square

Material Grade 304 stainless steel RHS (Rectangular Hollow Section)
Finish Linished or electro-polished

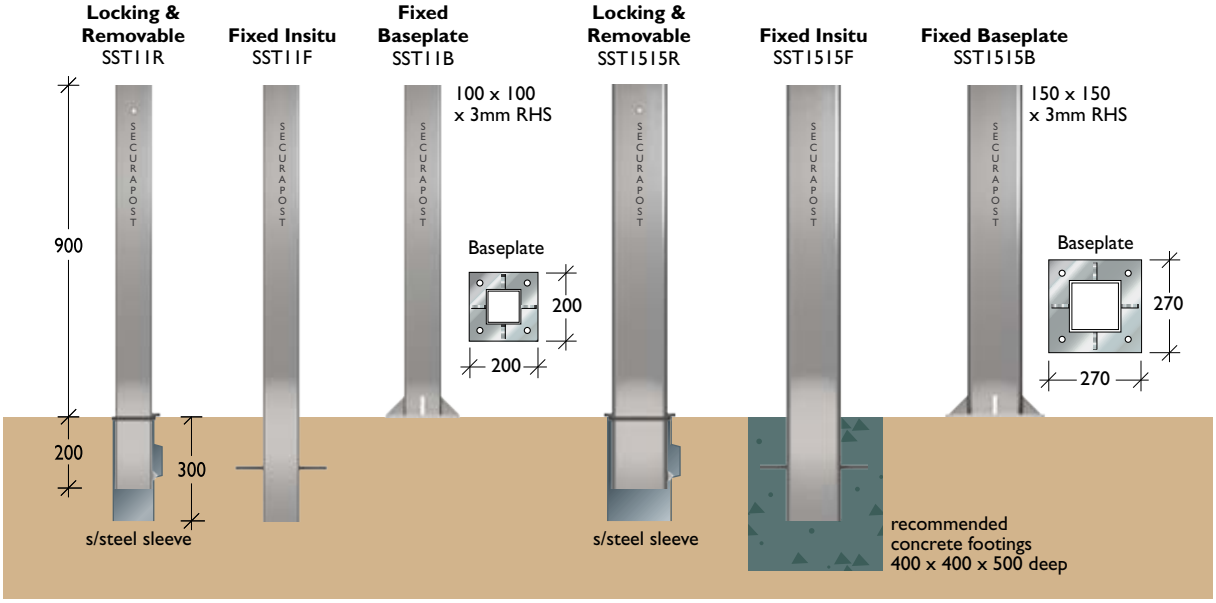

Rectangular

Material 150(152.4) x 75(76.20) x 3.0mm Grade 304 stainless steel RHS (Rectangular Hollow Section)
Finish Linished or electro-polished

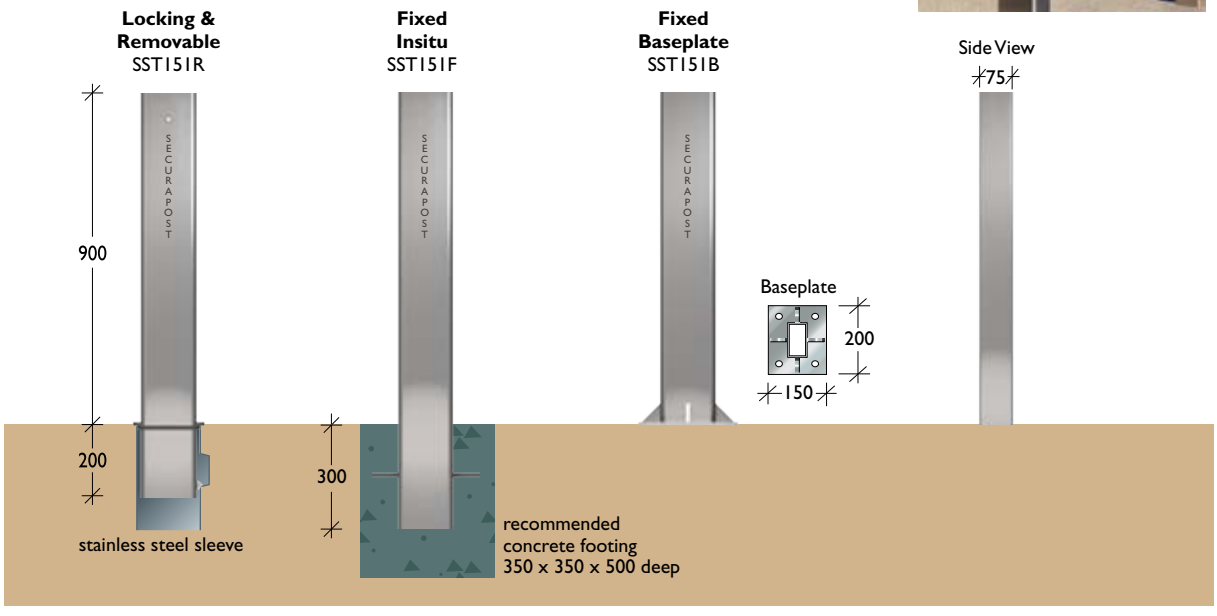

Corso

Material 150(152.4) x 100(101.6) x 3.0 mm Grade 304 stainless steel RHS
200(203.2) x 100(101.6) x 3.0mm Grade 304 stainless steel RHS

Finish Linished or electro-polished

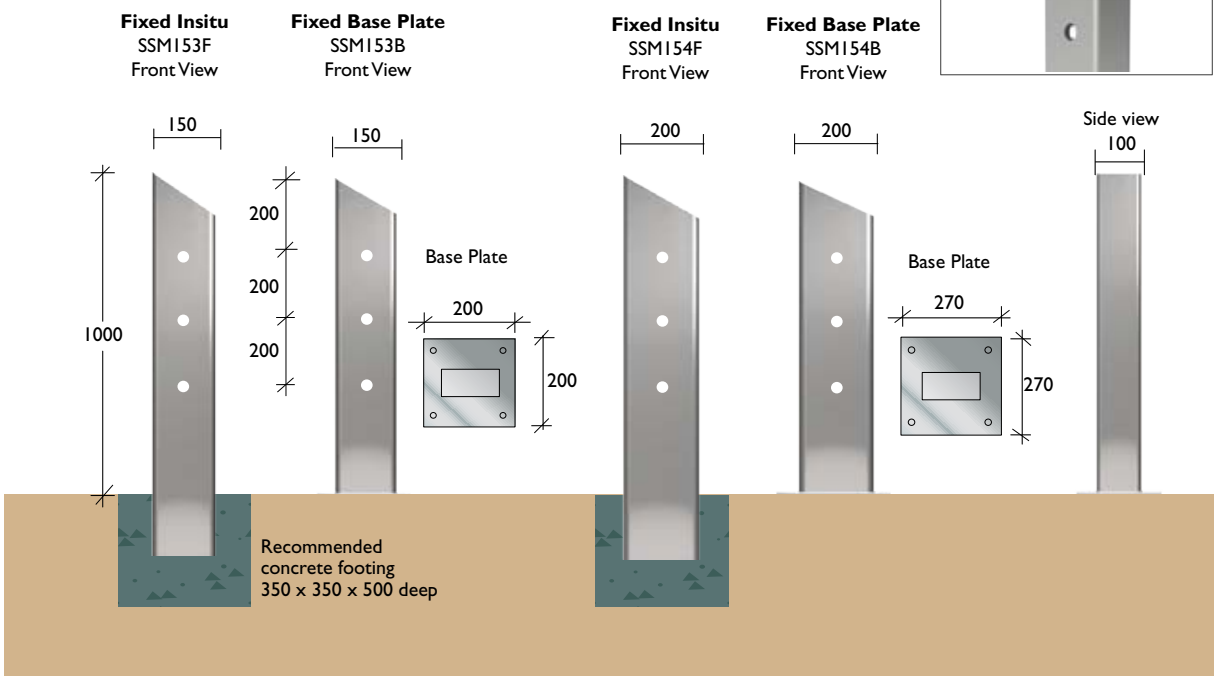

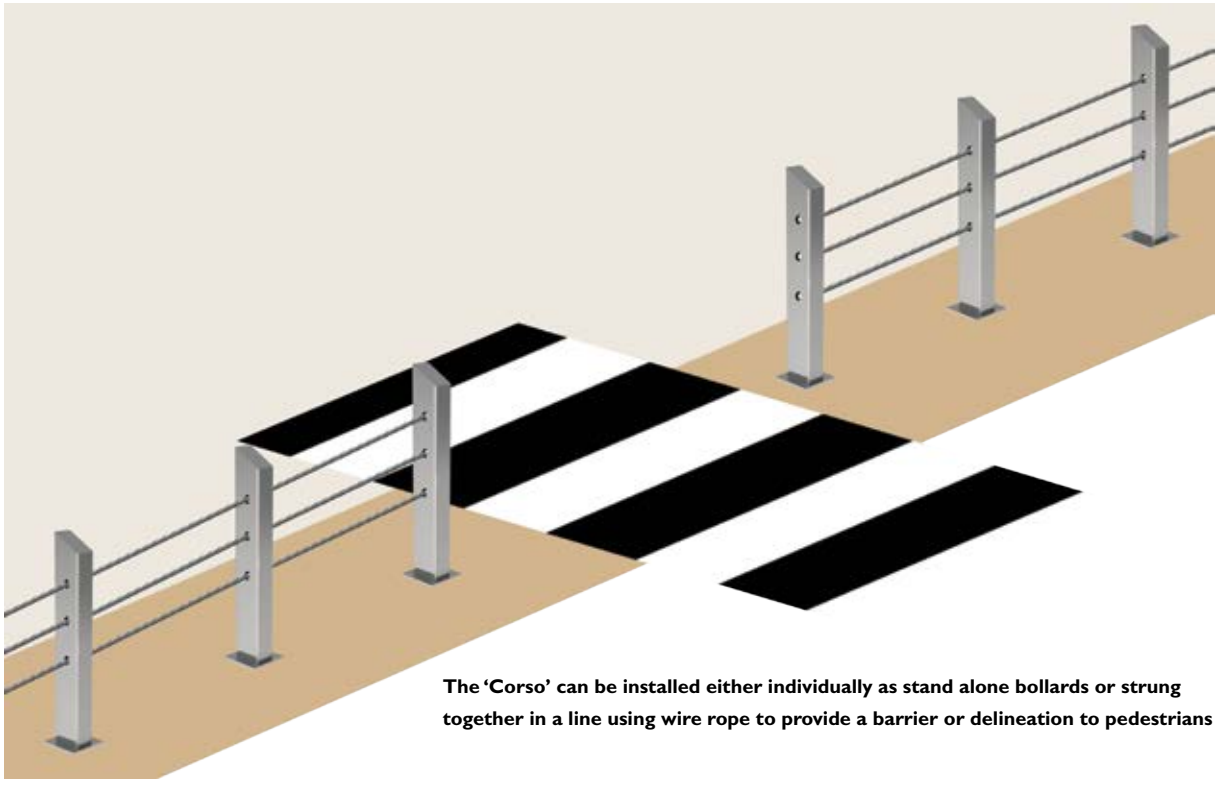

The 'Corso' can be installed either individually as stand alone bollards or strung together in a line using wire rope to provide a barrier or delineation to pedestrians

Architectural Range > Stainless Steel

Screen

Material Grade 304 stainless steel mesh
Finish Linished (Level 4)

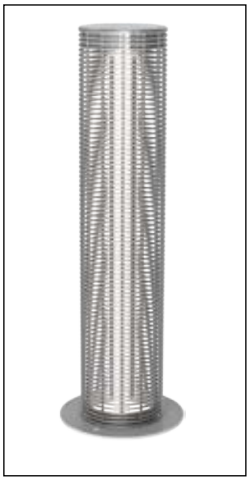

Round
Fixed Baseplate
JSR150B

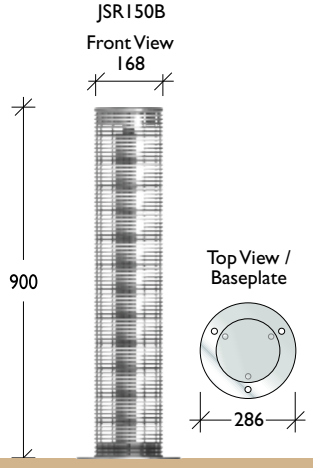

Square
Fixed Baseplate
JSS150B

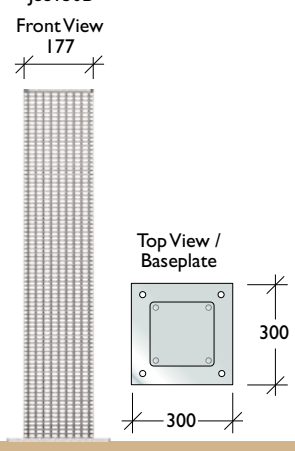

Lighting
Available in Round and Square.
Refer *Lighting* section.

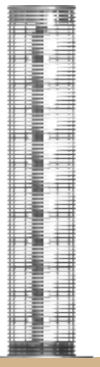

Smart Bollard

Material Grade 304 stainless steel pipe
Finish Linished or electro-polished

SSM200B

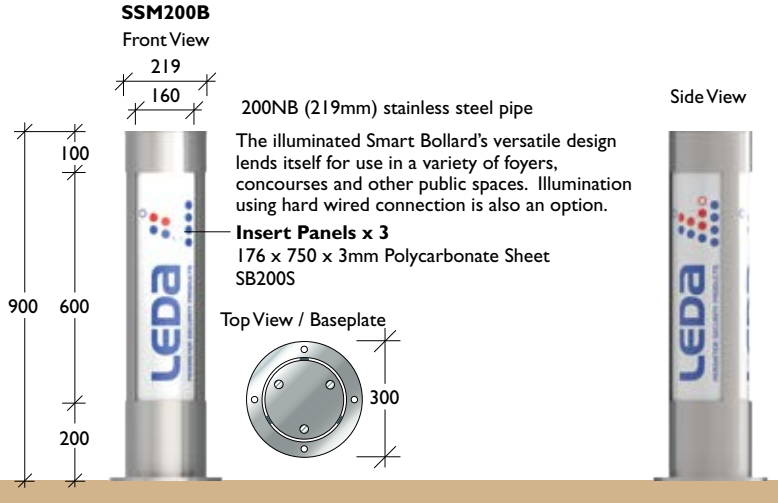

Sign Bollards

Material 150NB (168.3) x 3.40mm Grade 304 stainless steel pipe
Finish Linished or electro-polished

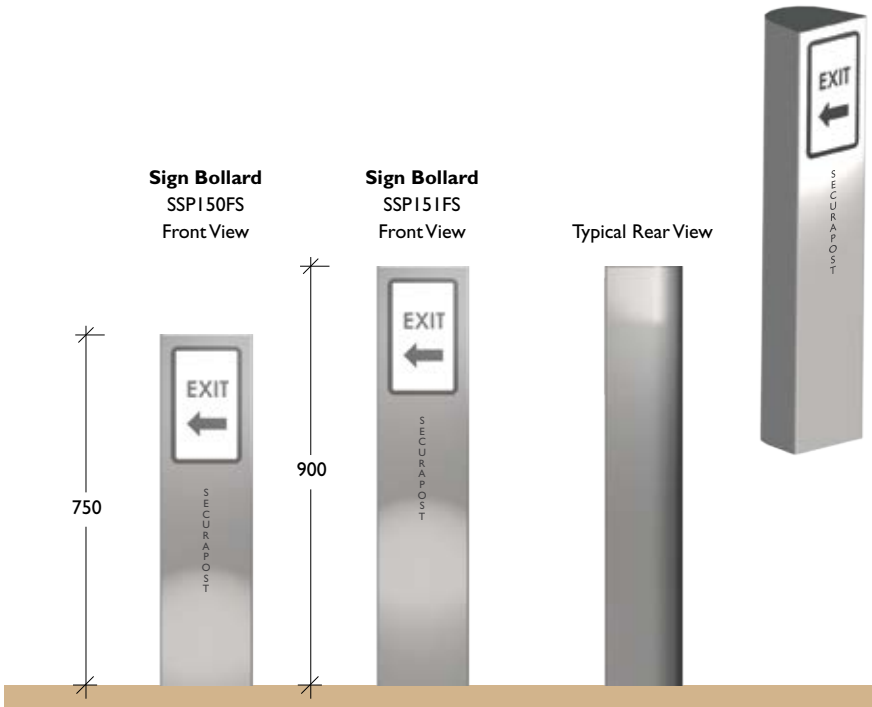

Smokers Bollards

Material Butt Bin. 90NB (101.6) x 2.11mm Grade 304 Stainless Steel Pipe
Bollard. 150NB (168.3) x 3.40mm Grade 304 Stainless Steel Pipe
Finish Linished or electro-polished

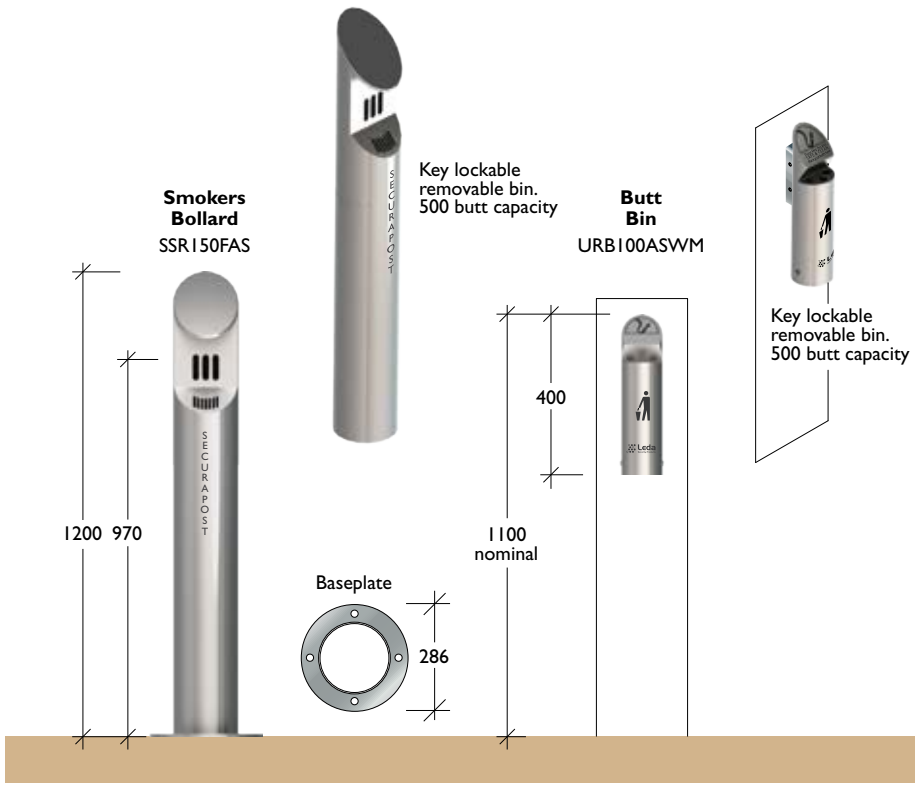

Aluminium

Aluminium is a strong, lightweight, corrosion-resistant material that is ideally suited for coating with electrostatically applied powder coated finishes.

Traditional bollards such as Ambassador, Commodore and Parisian can be supplied with polished tops or fully powder coated.

Features

- Elegant traditional designs
- Range of sizes
- Powder coated colour finishes
- Choice of styles –
  - Fixed Insitu
  - Fixed Baseplate
  - Locking & Removable
  - Lighting (refer *Lighting* bollards)

Parisian

Material 80NB (88.9) x 3.25mm medium duty aluminium pipe
100 x 100mm aluminium RHS

Finish Electrostatically powder coated in a range of colours

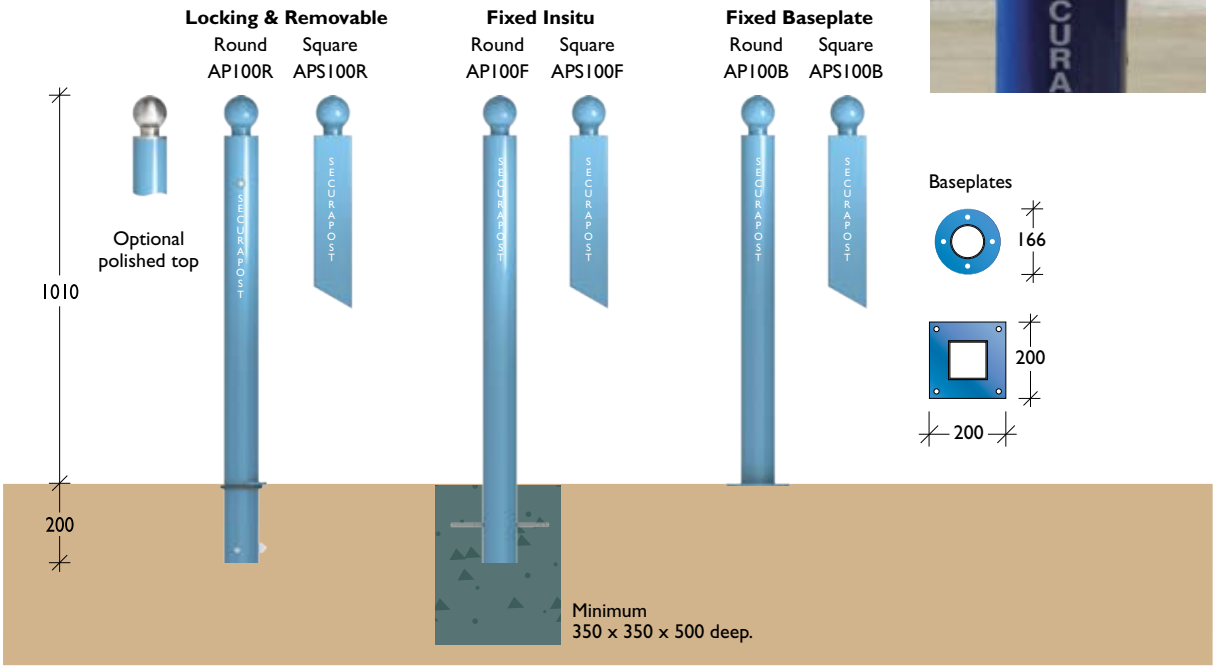

Commodore

Material 80NB (88.9) x 3.25mm medium duty aluminium pipe

Finish Electrostatically powder coated in a range of colours

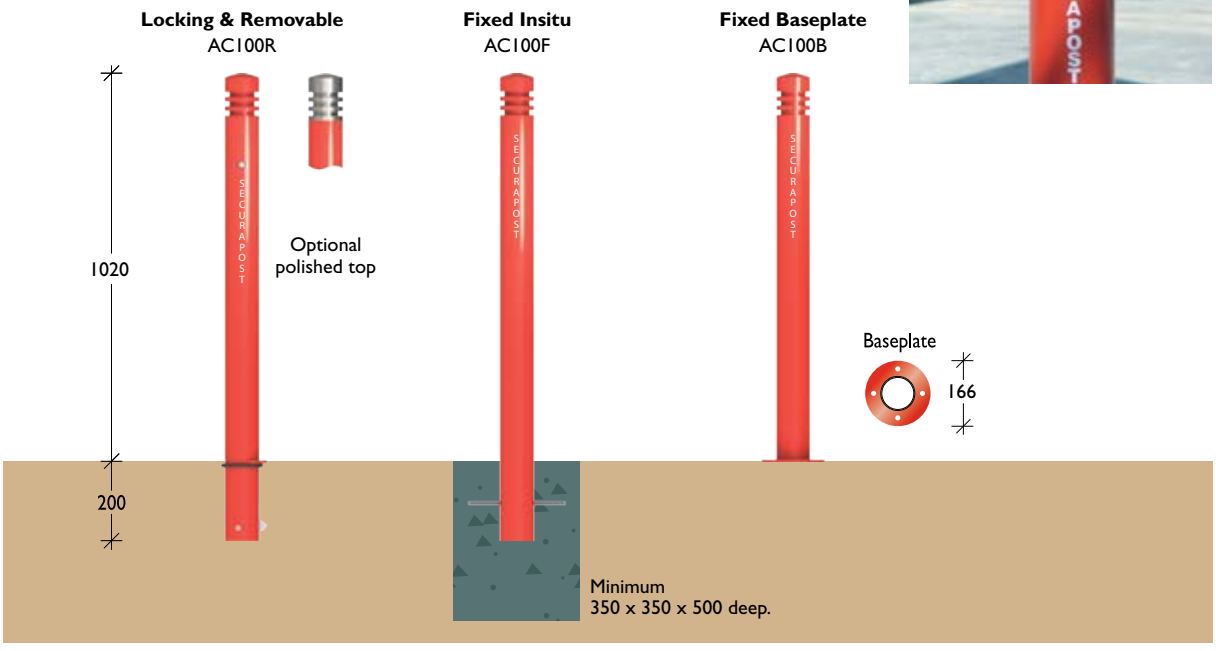

Architectural Range > Aluminium

Ambassador

Material 150NB (165.1) x 5.0mm medium duty aluminium pipe
Finish Electrostatically powder coated in a range of colours

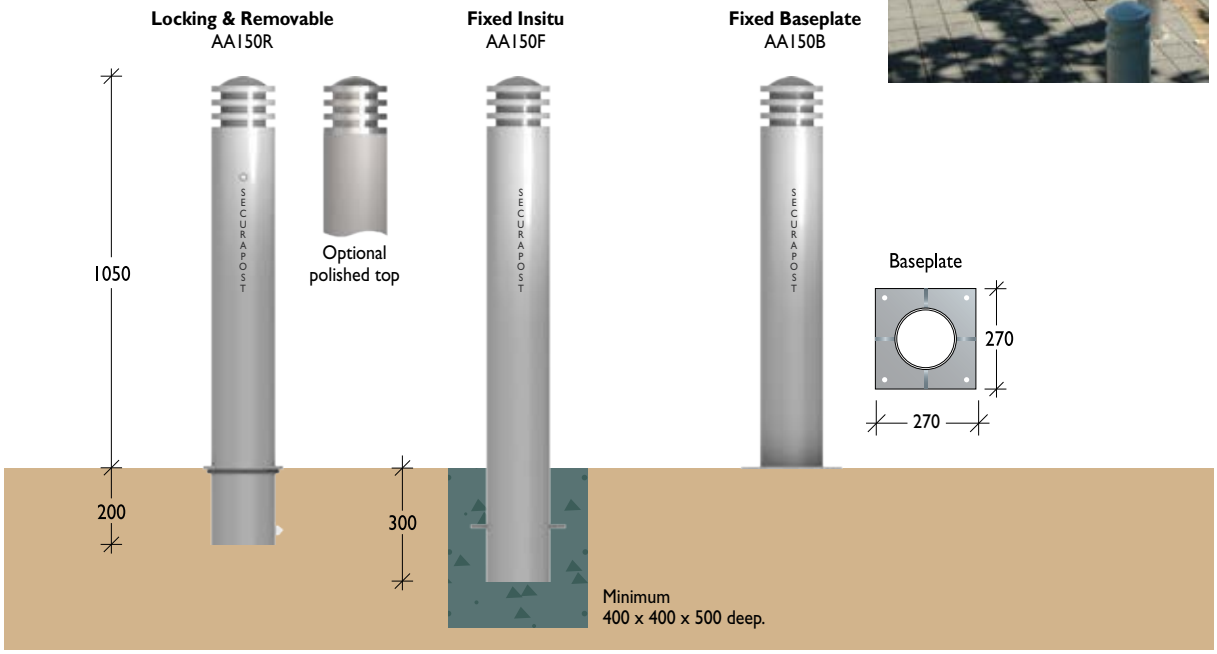

Victorian

Material Outer – 192mm cast aluminium
Inner – 65NB (76.1) x 3.6mm medium duty galvanised pipe
Finish Electrostatically powder coated in selected heritage colours

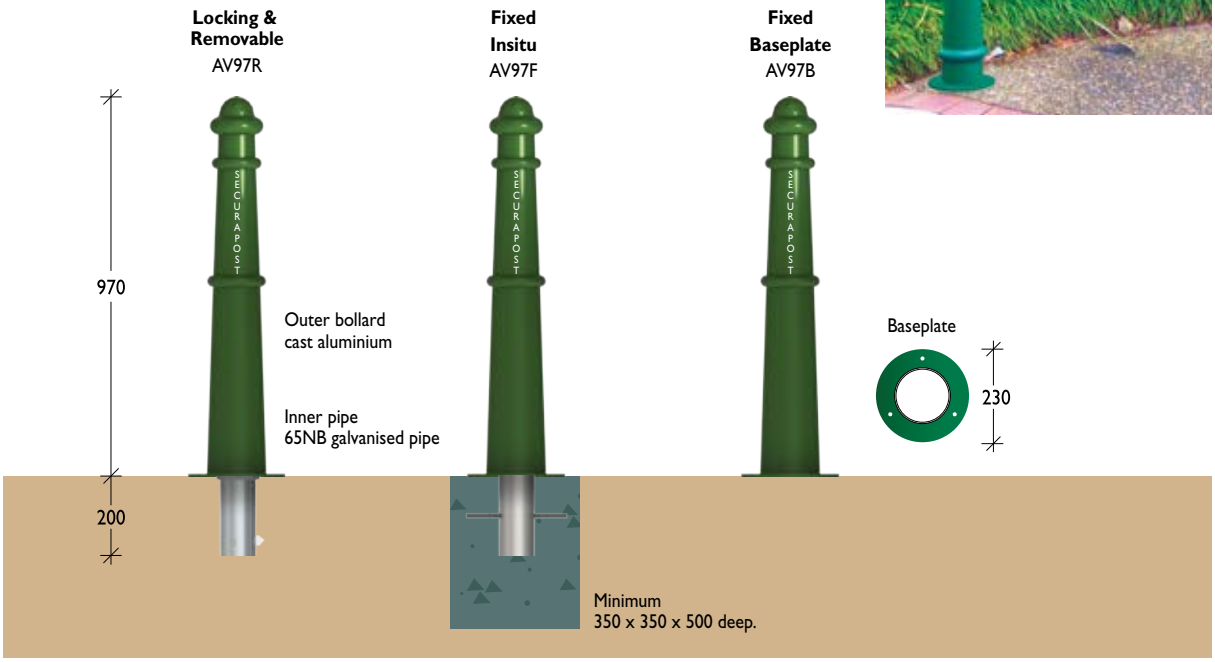

Aegis

Material 150NB (165.1) x 5.0mm medium duty aluminium pipe
Finish 2 pack wet spray in a range of colours

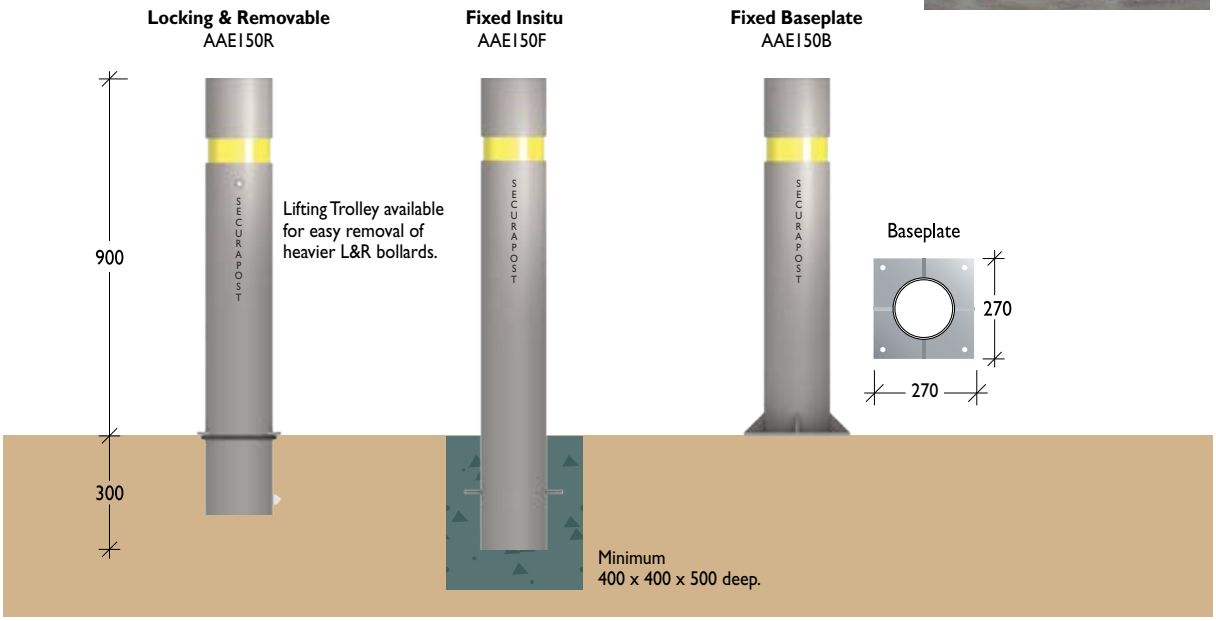

Timber

Using the natural beauty of timber, Leda offers two distinct bollard styles to complement both stylish urban or hardy rustic projects.

Elegant timber combined with galvanised or stainless steel provides an attractive range of '**urban' bollards** in either fixed insitu or base plate models. The contrasting infill panels are normally manufactured from merbau, a very durable and termite-resistant wood, however alternative select timber can be incorporated if specified. Matching lighting bollards to suit, are also available.

Typically suited for for marine and park environments, Leda's **solid hardwood bollards** are available in both round and square profiles. Optional stainless steel caps are available as well as girth straps that can be used as support for rope or chain connections.

These visually impressive bollards are normally available in spotted gum, however as supply is often limited, please contact nearest LEDA Sales office to discuss material & type of Hardwood available.

Features

- Natural beauty of timber
- Contemporary and traditional designs
- Choice of styles –
  Fixed Insitu
  Fixed Baseplate
- Matching lighting bollards also available for the Urban Range.

Urban 2100

Material Mild steel – 150 UC mild steel
Stainless steel – 10mm plate
Hardwood – Range of options available

Finish Hot dipped galvanised / linished (Level 4)

Please contact nearest LEDA Sales office to discuss material & type of Hardwood available.

Fixed Insitu
Mild Steel
URB2150F
Stainless Steel
SURB2150F

Fixed Baseplate
Mild Steel
URB2150B
Stainless Steel
SURB2150B

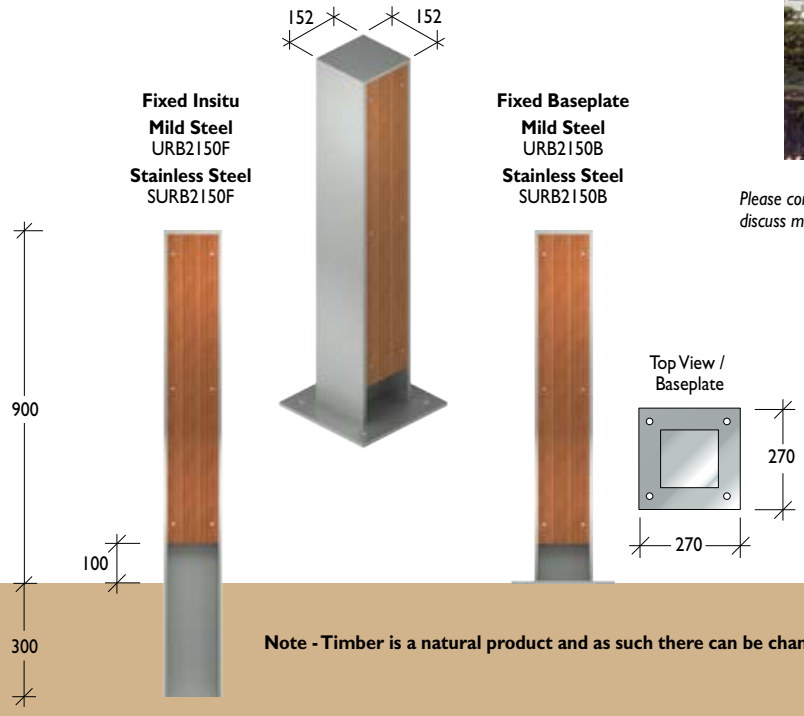

Note - Timber is a natural product and as such there can be changes in colour and texture

Urban 4100

Material Steel – 10mm flat bar – mild steel / stainless steel
Hardwood – Range of options available

Finish Hot dipped galvanised / linished (Level 4)

Please contact nearest LEDA Sales office to discuss material & type of Hardwood available.

Fixed Insitu
Mild Steel
URB4150F
Stainless Steel
SURB4150F

Fixed Baseplate
Mild Steel
URB4150B
Stainless Steel
SURB4150B

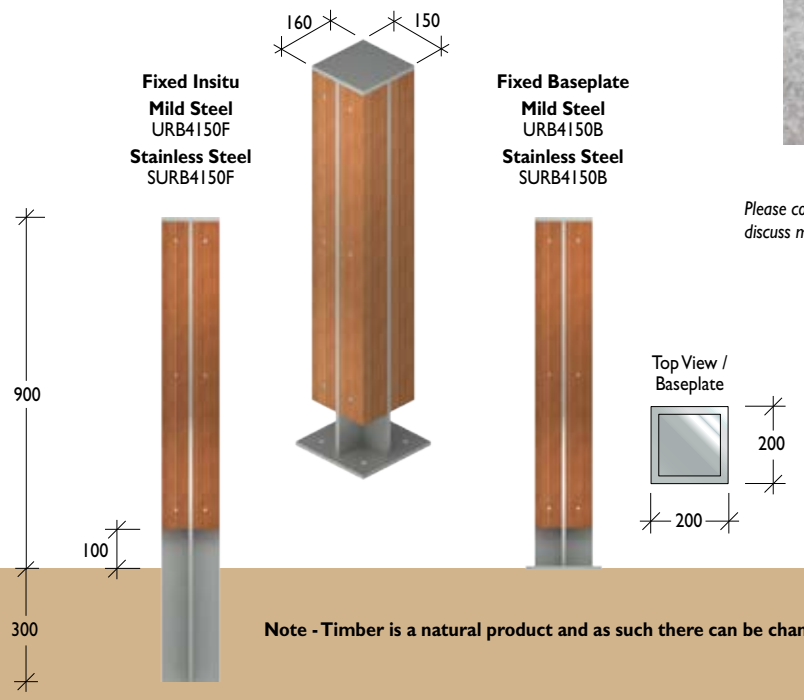

Note - Timber is a natural product and as such there can be changes in colour and texture

Architectural Range > Timber

Hardwood Round

Material Range of Hardwood options available

Marine grade stainless steel caps and straps

Please contact nearest LEDA Sales office to discuss material & type of Hardwood available.

Fixed Insitu

TBR27F HW

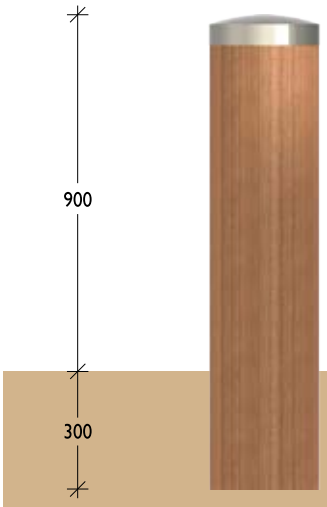

Fixed Insitu

STBR27F HW

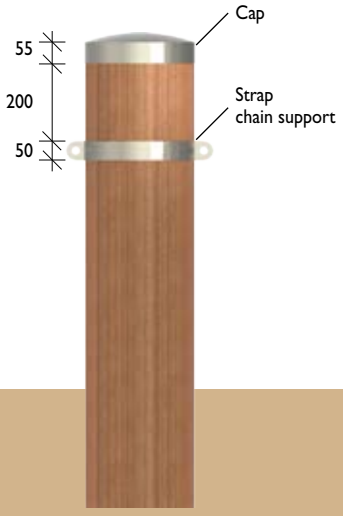

Cap
LS10271

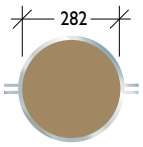

Strap
LS10272

Hardwood Square

Material Range of Hardwood options available

Marine grade stainless steel caps and straps

Please contact nearest LEDA Sales office to discuss material & type of Hardwood available.

Fixed Insitu

TBS22F HW

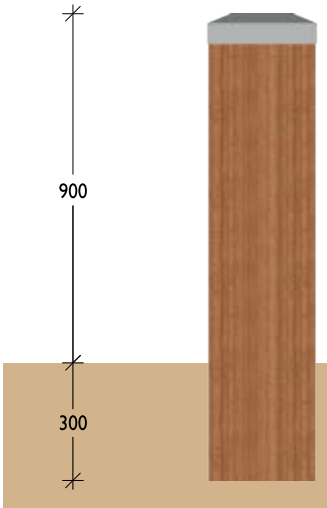

Fixed Insitu

STBS22F HW

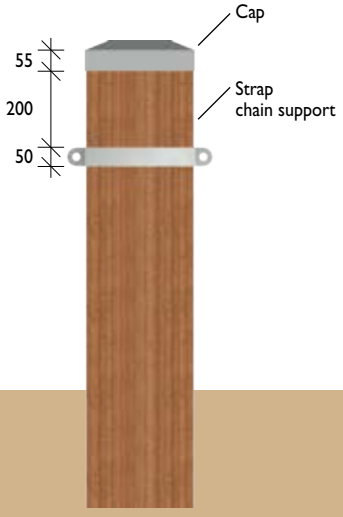

Cap
LS10267

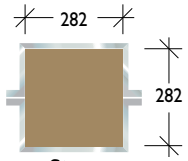

Strap
LS10268

Pre-cast Concrete

Over the past 20 years Leda has developed a comprehensive range of pre-cast concrete bollards in both traditional and modern profiles.

Leda pre-cast concrete bollards are manufactured using off-white cement and are lightly sand-blasted to provide an attractive exposed finish. Other surface finishes may be available on certain models – check with your Leda sales office.

Pre-cast concrete bollards are an effective visual deterrent for vehicular access control, and require minimal maintenance. While some models are free standing, the majority are installed using cast-in heavy duty galvanised pipe sections. This provides an effective method of keying into the pavement by either core drilling or casting into concrete. Wherever possible, stainless steel ferrules are cast-in to the bollards for ease of handling and lifting.

Features

- Large range of aesthetic shapes
- Sturdy and strong
- Effective visual deterrent
- Minimum maintenance

Architectural Range > Pre-cast Concrete

Richmond

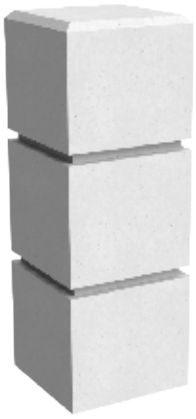

Windsor

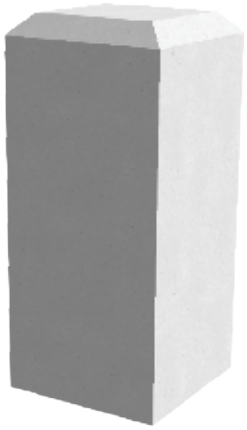

Russell Square

Russell Round

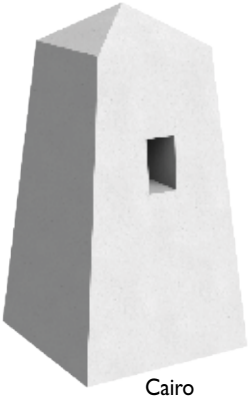

Cairo

Roman

Camden Dome

Camden Spherical

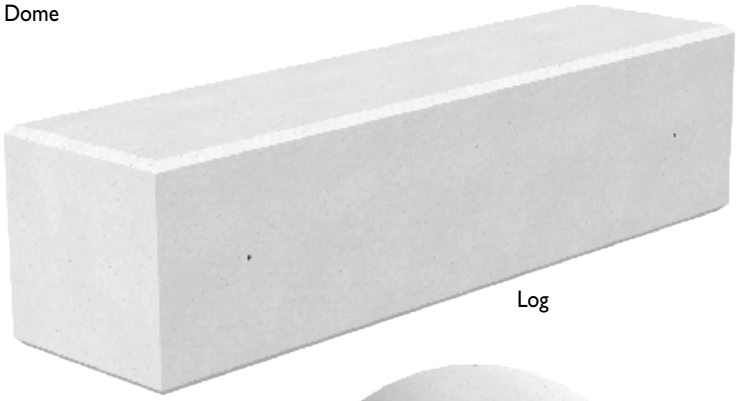

Log

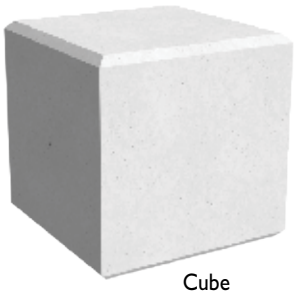

Cube

Collossus

Richmond

Material 30MPa concrete / 80NB (88.9) x 5.0mm heavy duty galvanised pipe
Finish Off-white, lightly sand blasted

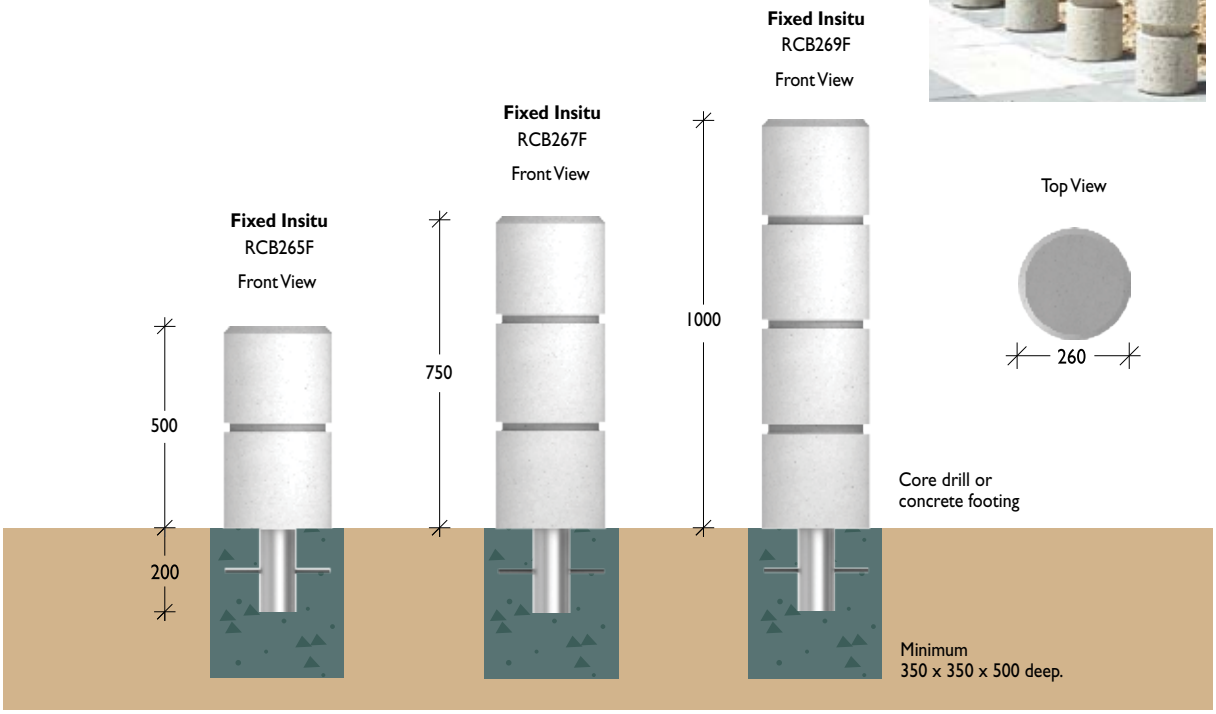

Windsor

Material 30MPa concrete / 80NB (88.9) x 5.0mm heavy duty galvanised pipe
Finish Off-white, lightly sand blasted

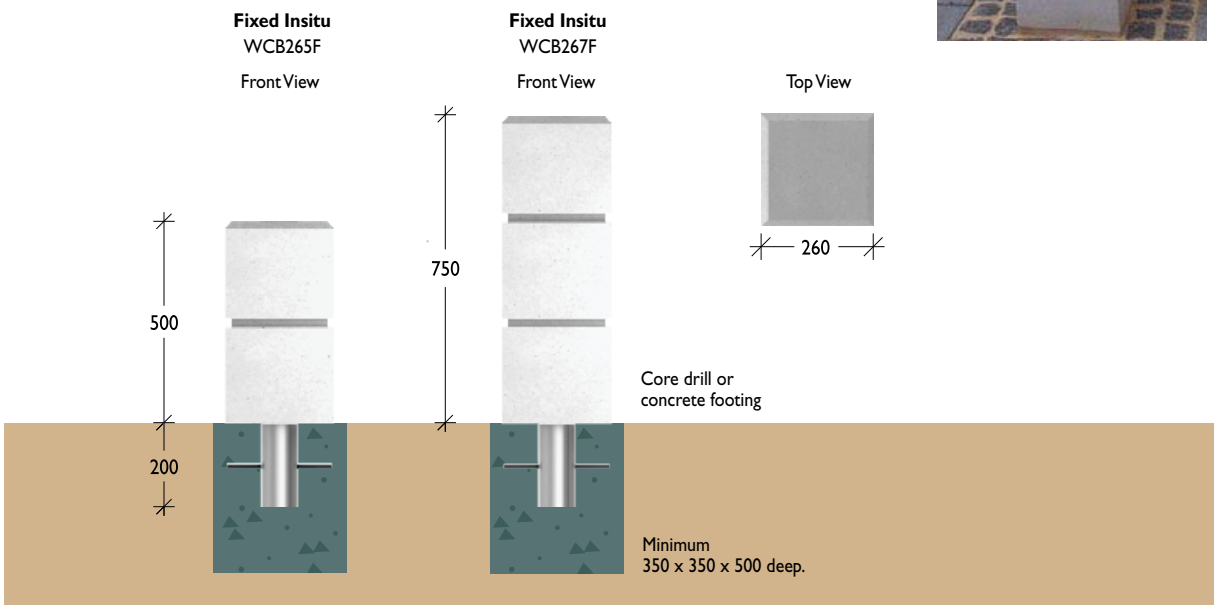

Architectural Range > Pre-cast Concrete

Russell Square

Material 30MPa concrete / 150NB (168.3) x 5.4mm linepipe
Finish Off-white, lightly sand blasted

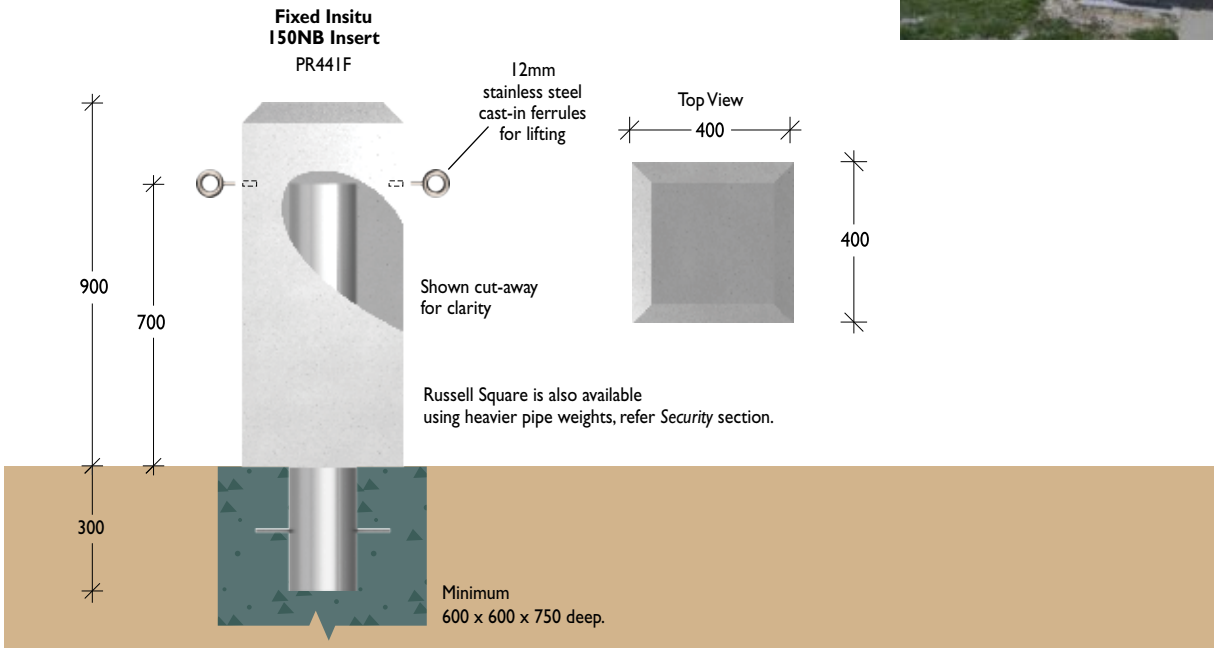

Russell Round

Material 30MPa concrete / 150NB (168.3) x 5.4mm linepipe
Finish Off-white, lightly sand blasted

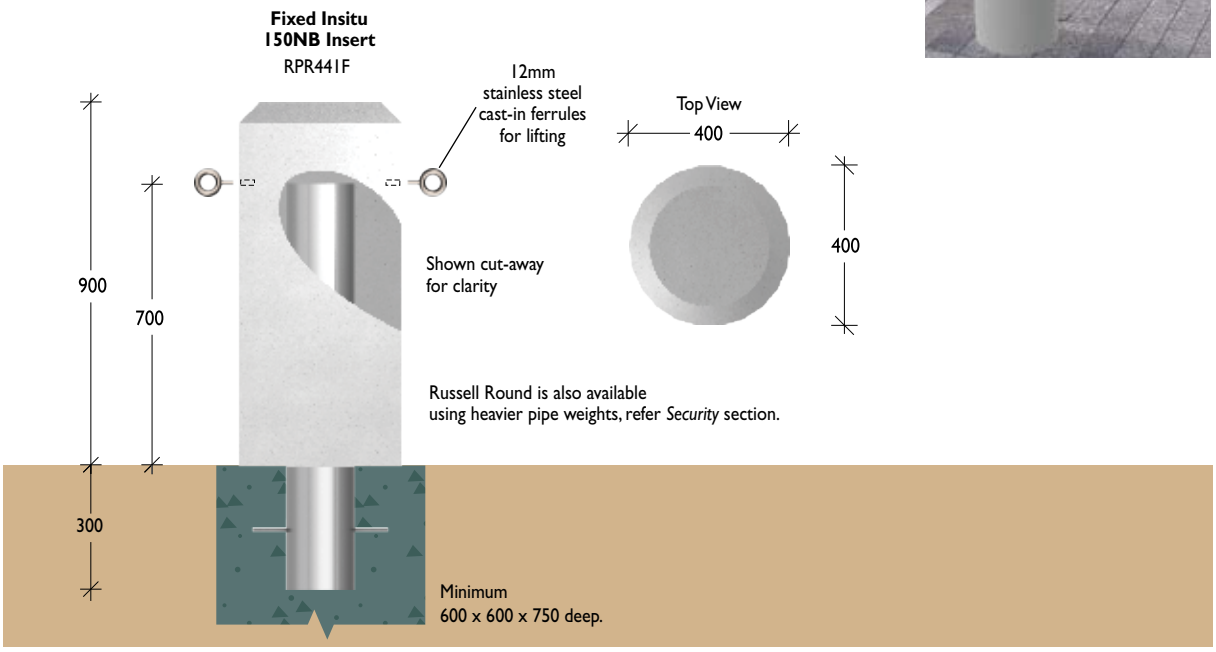

Cairo

Material 30MPa concrete / 80NB (88.9) x 5.0mm heavy duty galvanised pipe

Finish Off-white, lightly sand blasted / grey, smooth off-the-form

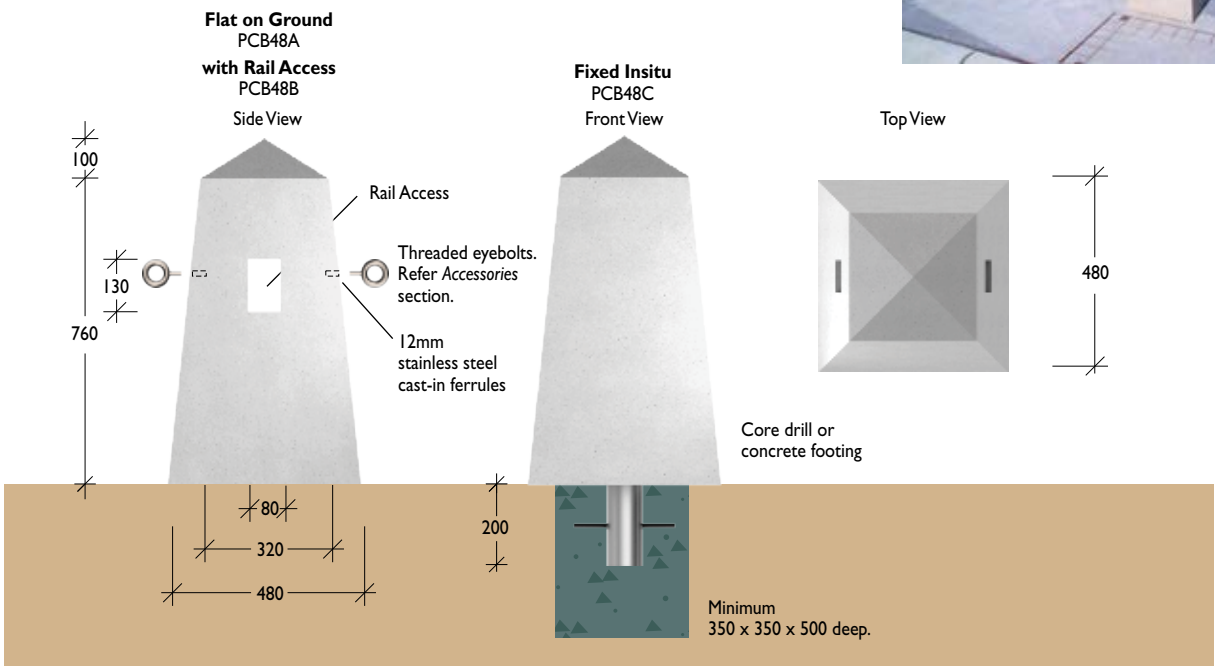

Roman

Material 30MPa concrete / 80NB (88.9) x 5.0mm heavy duty galvanised pipe

Finish Off-white, lightly sand blasted / grey, smooth off-the-form

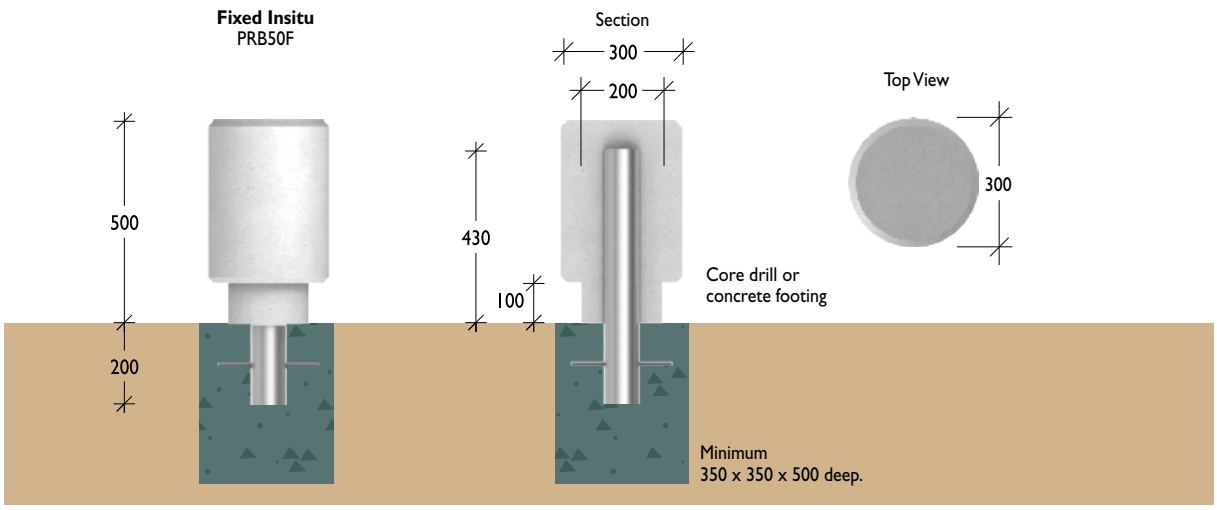

Architectural Range > Pre-cast Concrete

Camden

Material 30MPa concrete / 80NB (88.9) x 5.0mm heavy duty galvanised pipe
Finish Off-white, lightly sand blasted / grey, smooth off-the-form
Weight 125kg

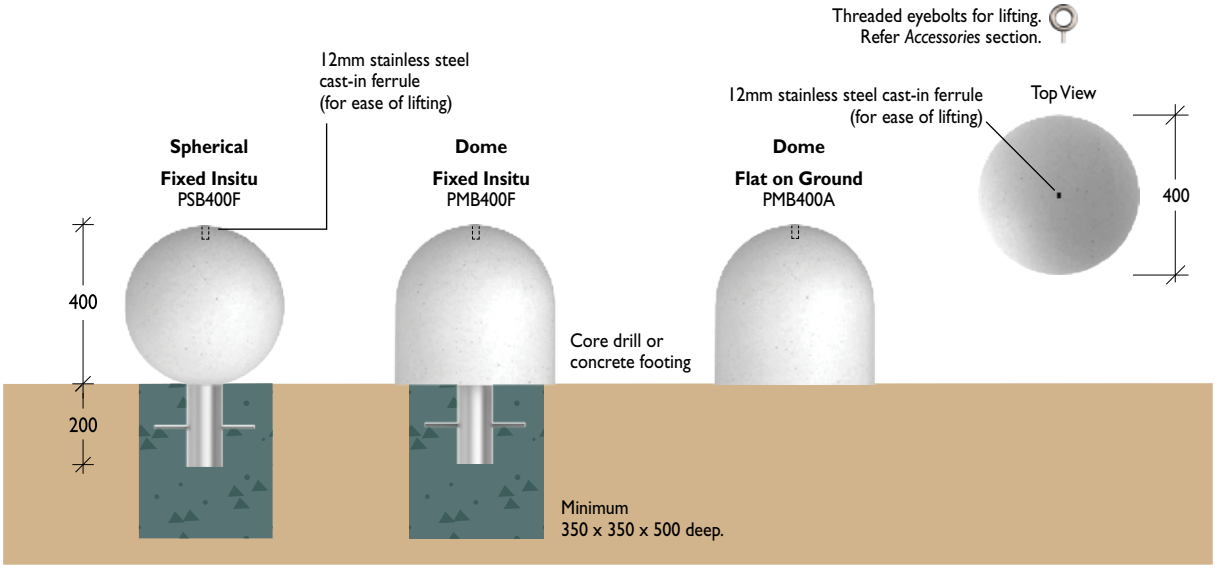

Colossus

Material 30MPa concrete / 80NB (88.9) x 5.0mm heavy duty galvanised pipe
Finish Off-white, lightly sand blasted / grey, smooth off-the-form
Weight 800kg

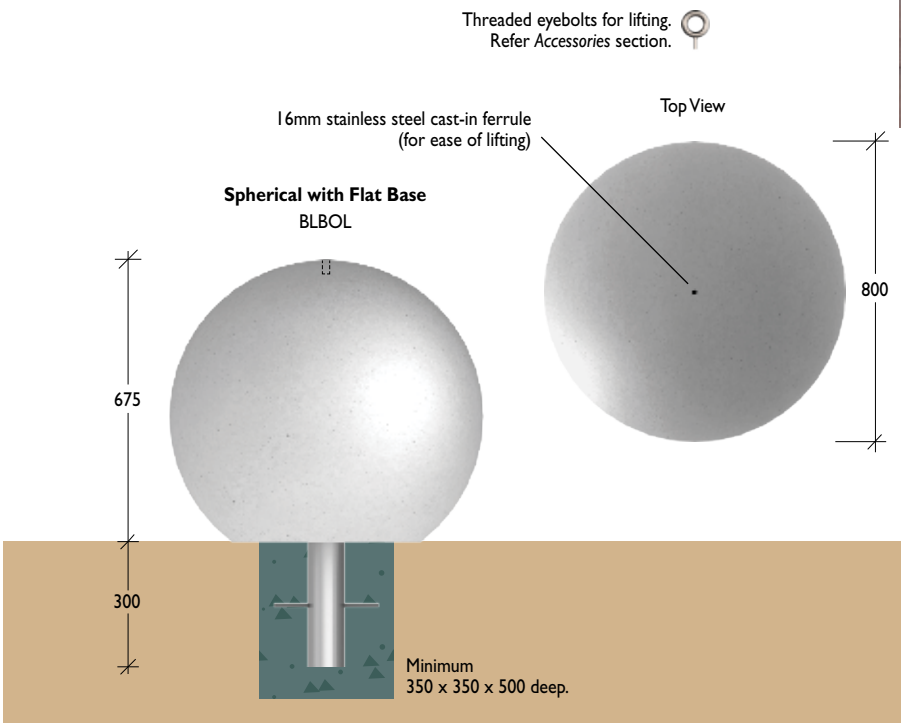

Cube

Material 30MPa concrete / 80NB (88.9) x 5.0mm heavy duty galvanised pipe
Finish Off-white, lightly sand blasted / grey, smooth off-the-form
Weight 310kg

An attractive and effective vehicle access control delineator or seating module.

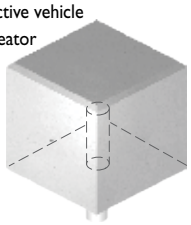

Flat On Ground
PCL55A

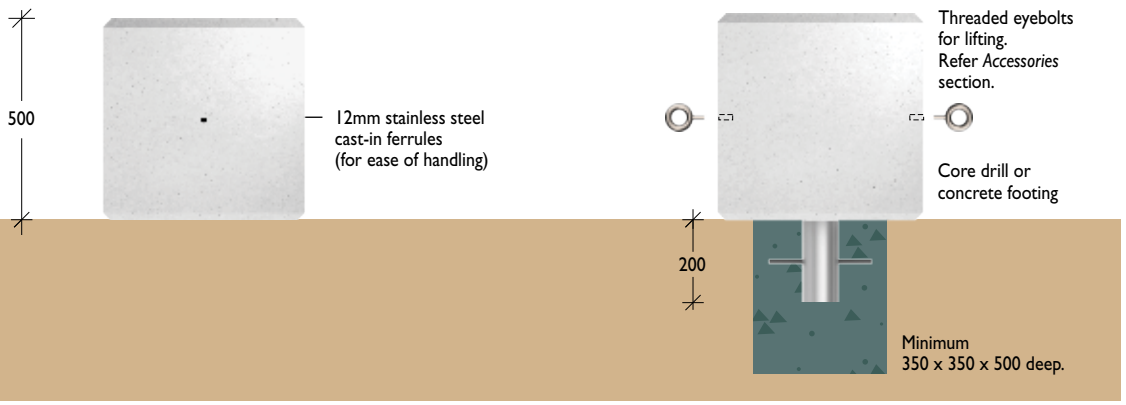

Fixed Insitu
PCL55F

Log

Material 30MPa concrete / 80NB (88.9) x 5.0mm heavy duty galvanised pipe
Finish Off-white, lightly sand blasted / grey, smooth off-the-form
Weight 1300kg

An attractive and effective vehicle access control delineator or seating module.

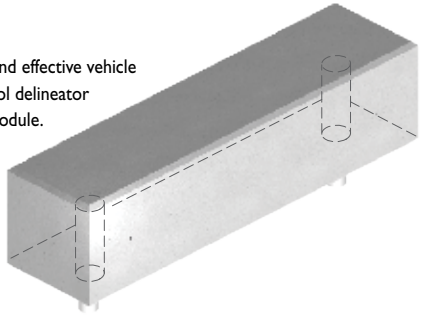

Flat on Ground
PCL205A

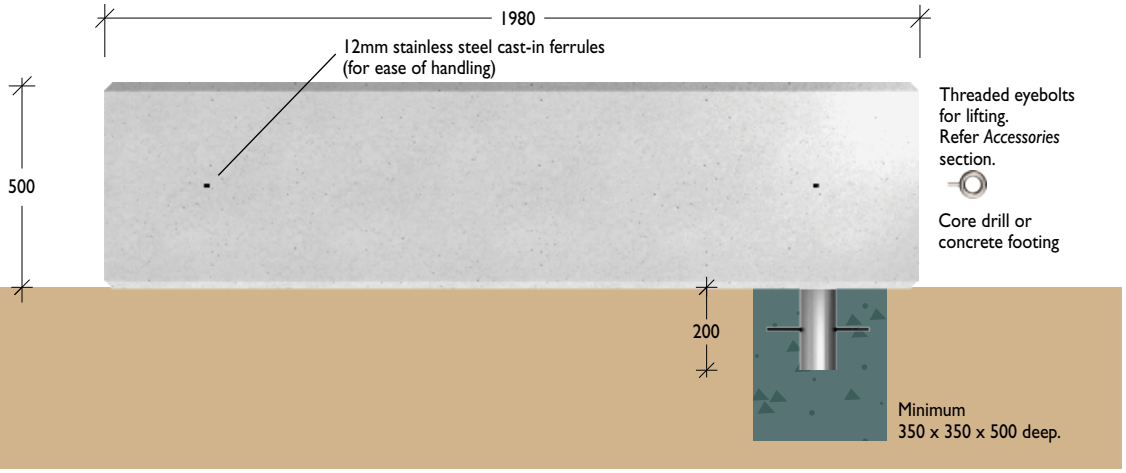

Fixed Insitu
PCL205F

Steel

The Leda steel bollard collection combines classic traditional bollards with a range of of smart modern plasma-cut shapes designed for a broad range of urban settings to address pedestrian safety and property protection.

Functional and durable, steel also has the advantage of being particularly suited to powder coating in a range of stylish colours and finishes.

Features

- Range of models & sizes
- Galvanised or powder coated colour finishes
- Choice of styles –
  Fixed Insitu
  Fixed Baseplate
  Locking & Removable

Steel bollards feature high impact resistance properties, are stronger than most other materials and are consequently recommended in most applications where motor vehicles are involved.

Major

Aegis

Supermarket
Internal base plate

Supermarket
Screw down

Guardsman

Warden

65 Series

Architectural Range > Steel

Major

Material 80NB (88.9) x 5.9mm extra heavy duty gal pipe / 3mm steel plate
Finish 2 pack wet spray in a range of colours

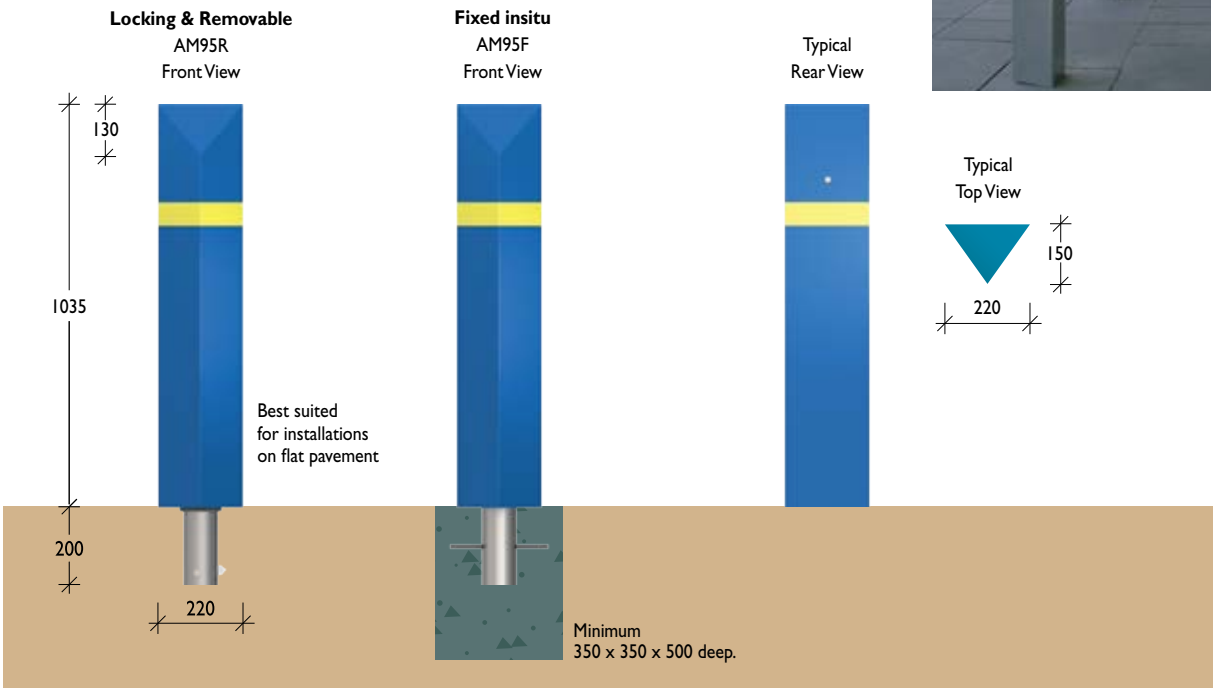

Aegis

Material 150NB (165.1) x 5.4 / 11.0mm medium or heavy duty steel pipe
Finish 2 pack wet spray in a range of colours

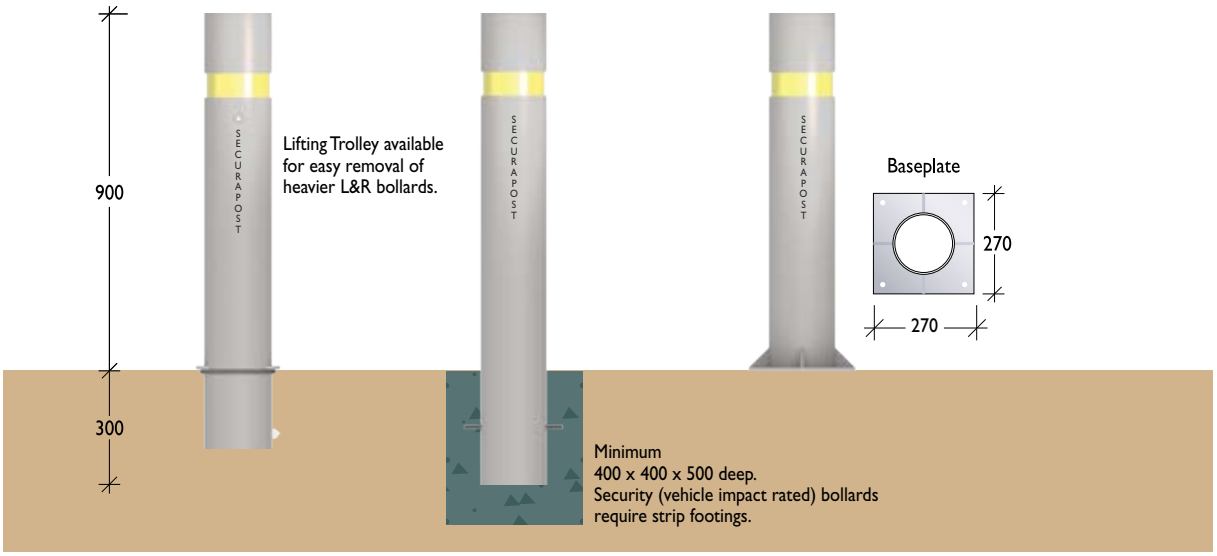

Supermarket
Internal baseplate

Material 80NB (88.9) x 3.20mm Steel pipe
100NB (114.3) x 5.40mm Steel pipe
150NB (168.3) x 5.40mm Steel pipe

Finish Galvanised or powdercoated in a range of colour

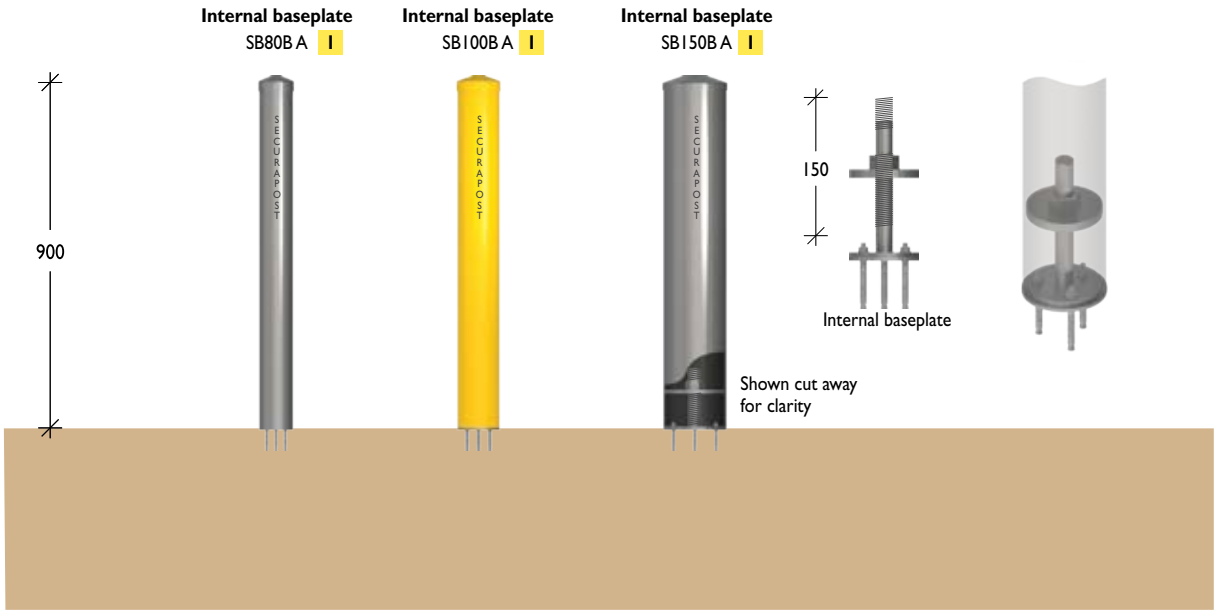

Screw down

Material 80NB (88.9) x 3.20mm Steel pipe
100NB (114.3) x 5.40mm Steel pipe
150NB (168.3) x 5.40mm Steel pipe

Finish Galvanised or powdercoated in a range of colour

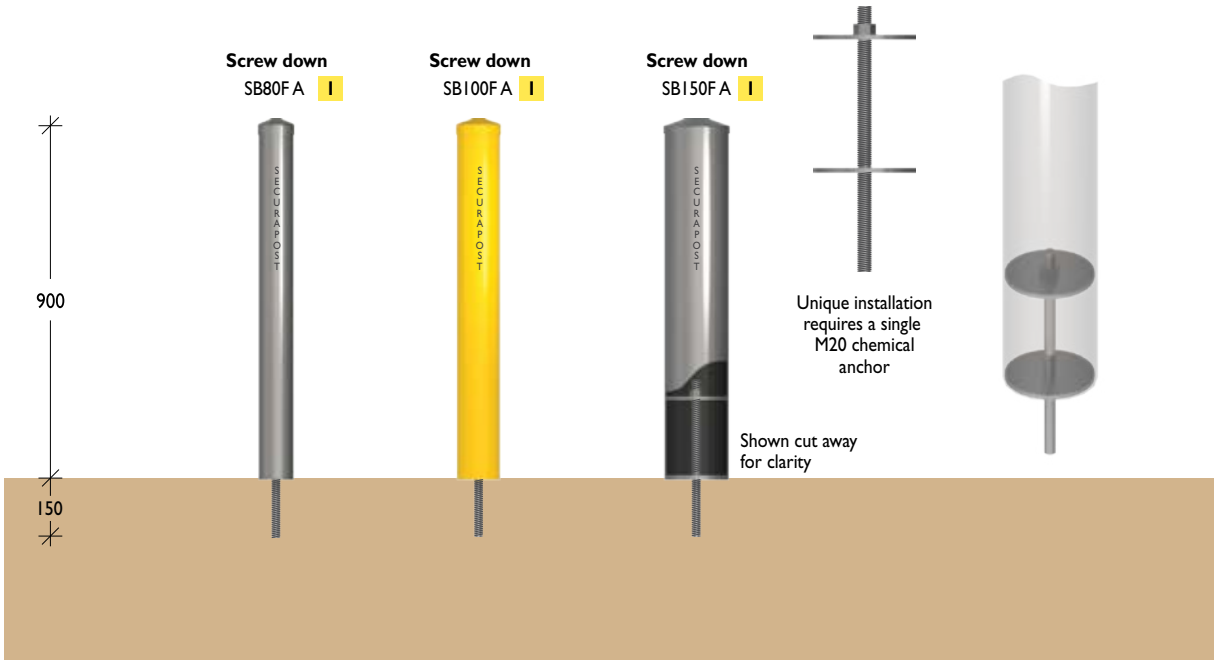

Architectural Range > Steel

Guardsman

Material FDB75B – 50mm galvanised RHS
FDB90B – 65NB (76.1) x 3.6mm medium duty (C250 Grade) gal pipe / 65NB (76.1) x 3.6mm stainless steel (Grade 304) pipe

Finish Electrostatically powder coated in black or industrial yellow / Linished or electro-polished

The perfect low cost vehicular access control device.
Also ideal for protecting your car space
and a good solution for suspended slab installations
or where core drilling is not possible.

Fold Down Bollard
FDB75B

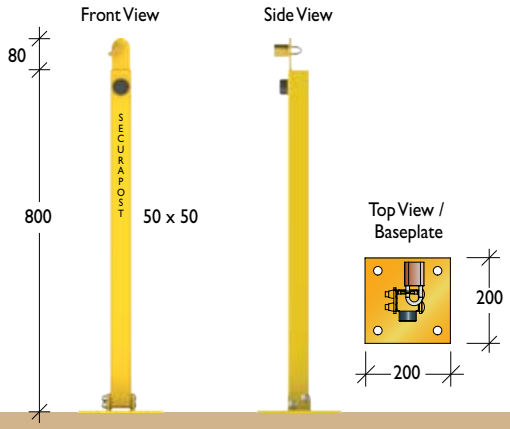

Fold Down Bollard
Steel
FDB90B
Stainless Steel
SFDB90B

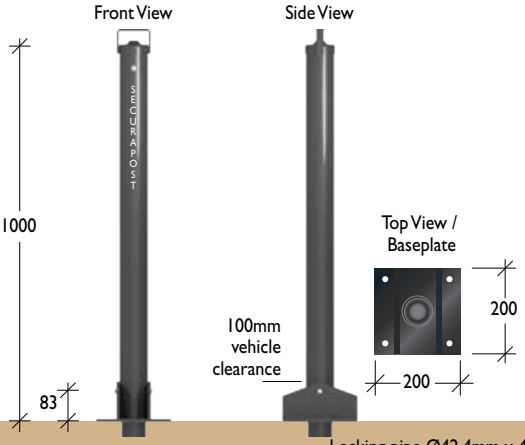

Locking pipe Ø42.4mm x 47mm

Warden

Material 80NB (88.9) x 5.9mm heavy duty (C250 Grade) galvanised pipe
20NB (26.9) x 2.6mm medium duty galvanised pipe

Finish Galvanised or electrostatically powder coated in a range of colours

Recommended for vehicular access control or parking protection and a good solution
for suspended slab installations or where core drilling is not possible.

Locking & Removable
SPS90B

Locking & Removable with wings
SPS90BW

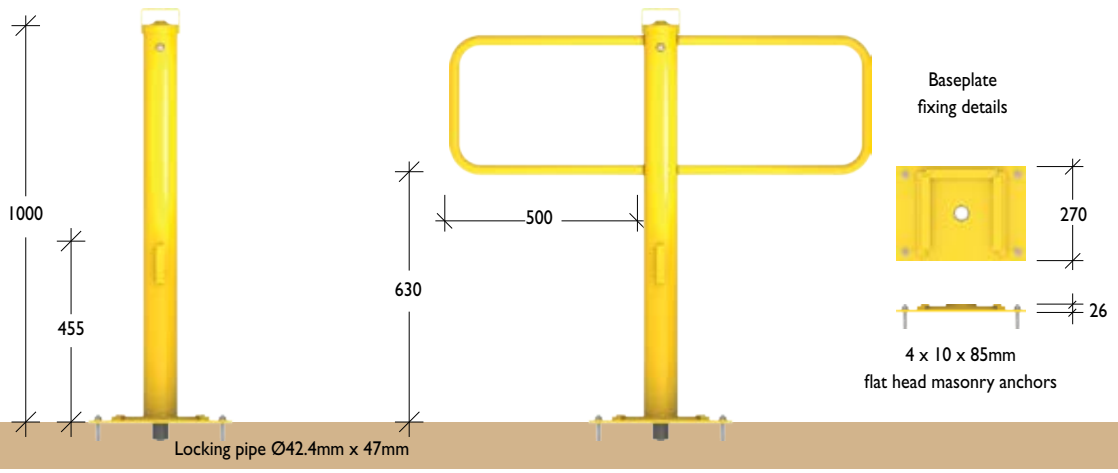

Locking pipe Ø42.4mm x 47mm

65 Series

Material 65NB (76.1) x 3.6mm medium duty galvanised pipe
Finish Electrostatically powder coated in a range of colours

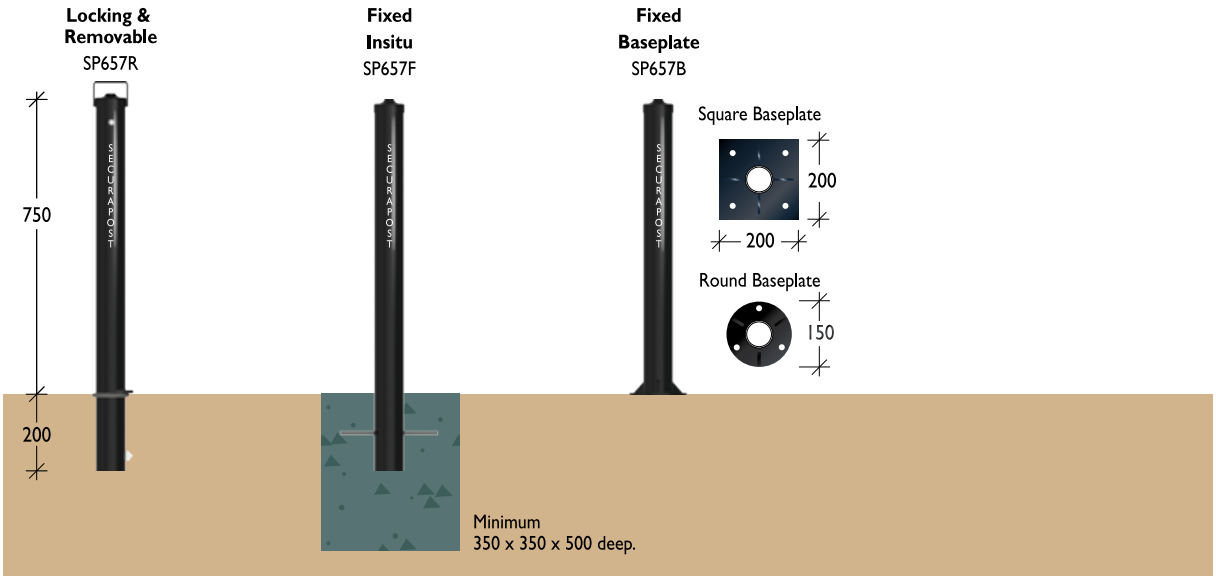

Plastic

Plastic sleeves provide an economical and easily replaceable finish for bollards in locations where surface damage is more likely, such as around supermarkets.

Using ecologically-sound recycled plastic, Leda offers two distinct plastic bollards;

- Plastic Sleeves
- Recycled Plastic Bollards

The enviro range of recycled plastic bollards are available in either round or square in a range of sizes. The option of machined grooves allows for decorative painting or attaching reflective tape.

Features

- Environmentally friendly recycled plastic
- A select range of colours
- Square, round and architectural models
- Textured attractive finish
- Range of sizes

The plastic range also includes flexible bollards and retractable lane marker bollards for lane control and delineation.

Plastic Sleeves
Ambassador

Material 170mm OD x 4.5mm low density polyethylene sleeve
150NB (165.1 x 5.4mm) steel pipe

Finish Limited range of heritage colours / fluorescent option

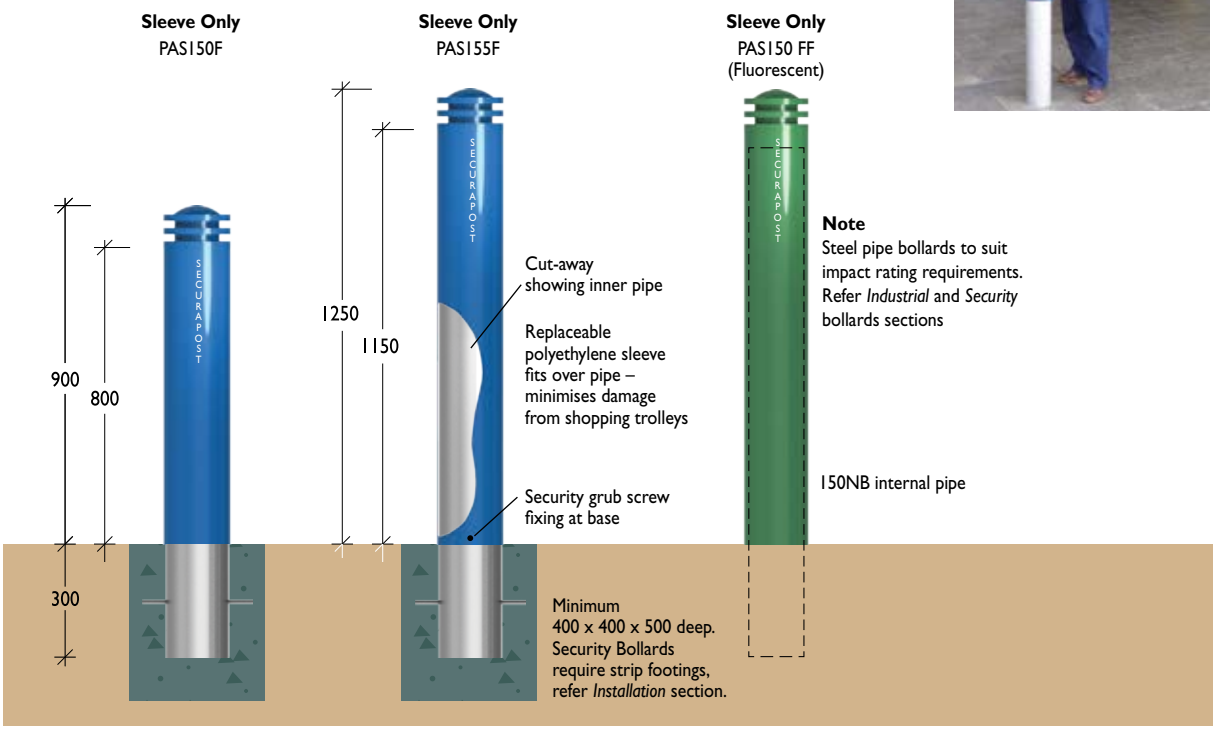

Note
Steel pipe bollards to suit impact rating requirements. Refer *Industrial* and *Security* bollards sections

Plastic Sleeves
Victorian

Material 192mm OD x 4.0mm low density polyethylene sleeve
80NB (88.9mm) x 5.9mm extra heavy duty galvanised pipe

Finish Limited range of heritage colours

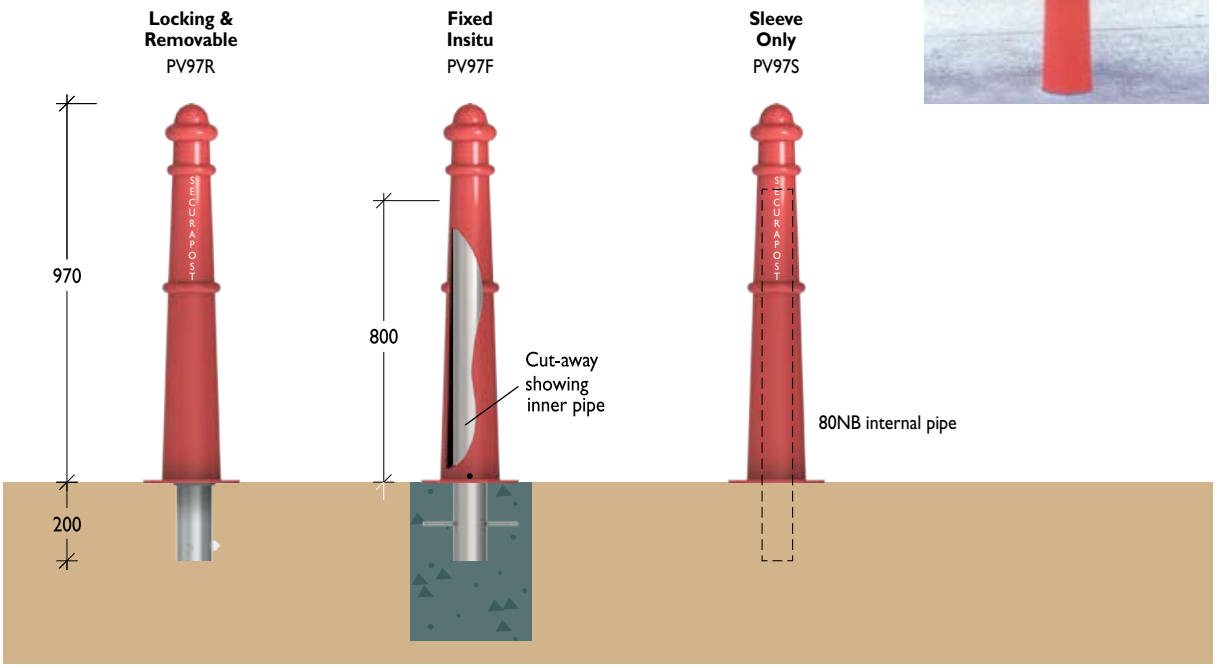

Architectural Range > Plastic

Plastic Recycled Round

Material 100% recycled plastic
Colours Charcoal, Brown or Green

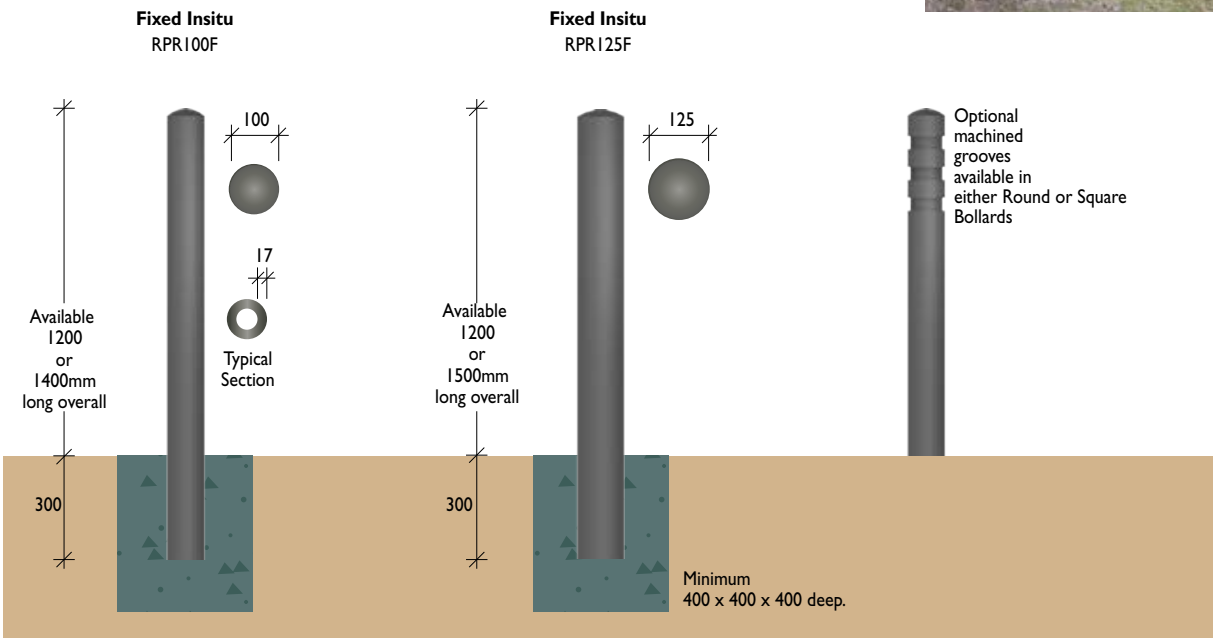

Plastic Recycled Square

Material 100% recycled plastic
Finish Charcoal

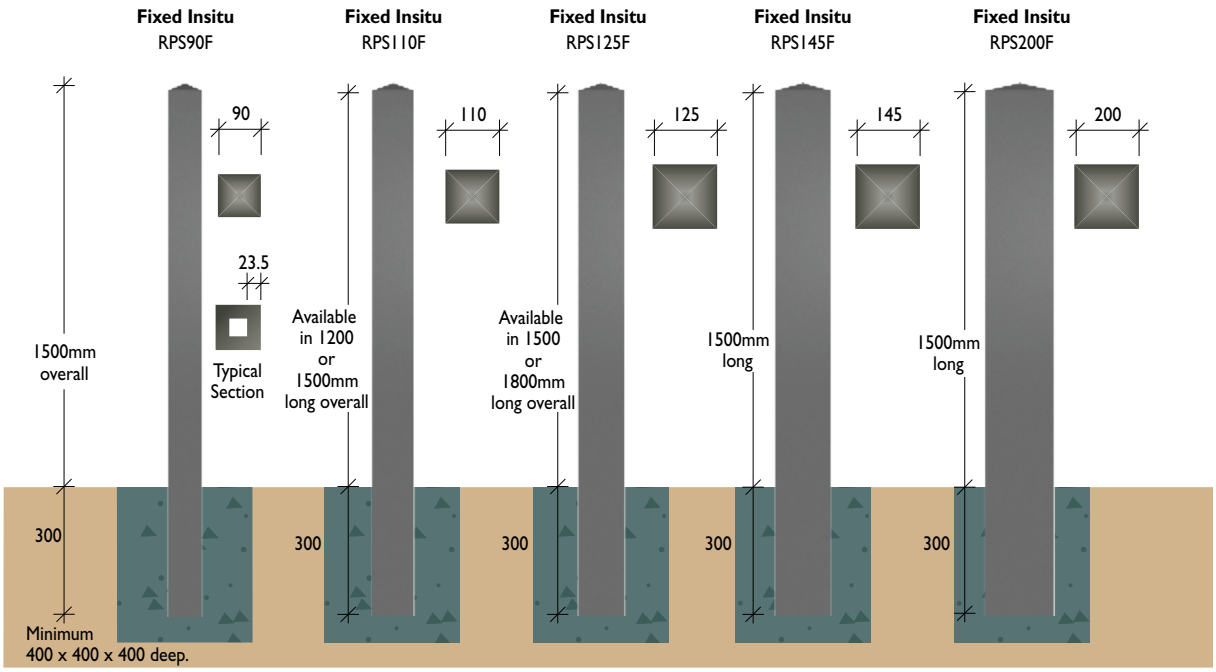

Flexible

Material 60mm PVC tube / 80NB stainless steel sleeve
Finish Orange

Helps minimise accidental damage with vehicular impacts.
Ideal for use in high traffic areas or where there is a high likelihood of bollards being impacted by vehicles. ie. Where motorists are unfamiliar with the location, as in hospital entry or carparks.

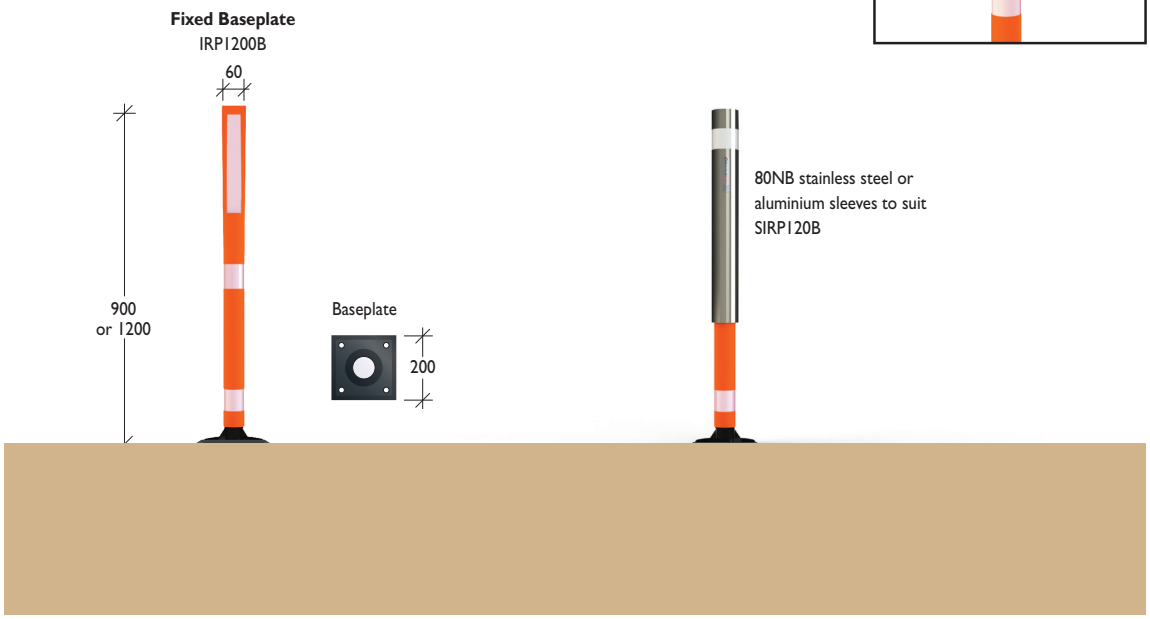

Non Standard Designs

While Leda have developed Australia's largest and most comprehensive range of bollards as standard products, there may be projects where 'new' or 'individual' designs are required.

In these cases Leda's team can assist in the development of these products. A typical example is a unique bollard design for "Sydney's Westin Hotel".

"Working from an architects brief Leda's engineering team were able to complete the design of these very unique bollards. The Bollards were manufactured from Grade 316 Stainless Steel, finely polished to a No. 8 finish. They were then nickel plated, treated with an ageing solution and finally finished with a 2 pack gloss urethane.

Supplied in both fixed and locking and removable models the bollards are also fitted with LED lighting and brass logo."

Lighting

Leda's *Lighting Bollards* range was developed to complement models in the existing range of *Designer Bollards* to provide specifiers a continuity of design that can be adopted throughout a project.

Lighting Bollards

Styles & Finishes

- Slimline Lighting
  Stainless Steel
- Ambassador Lighting
  Aluminium
- Urban Lighting
  Galvanised or
  Stainless Steel
  with Timber Infills
- Screen Full Height Lighting
  Stainless Steel
- Lasercut Full Height Lighting
  Aluminium or
  Stainless Steel

Stainless steel is ideal for corrosive environments like coastal areas and is recommended if security or impact resistance is an issue. Aluminium is an ideal product for powder coating and can be coloured to your requirements.

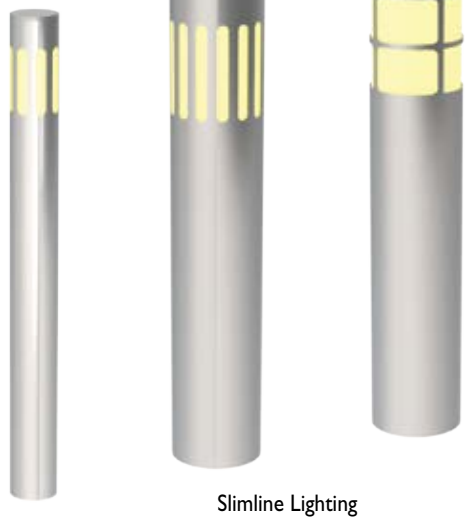

Slimline Lighting

Screen Lighting

Urban Lighting

Solar Lighting

Features

Size (Diameter)

The standard Slimline and Ambassador range is available in 150NB (168.3mm) outside diameter. Slimline stainless steel is also available in 80NB (88.9mm) is also available in slotted lighting. Slimline security lighting bollards are available in 150NB stainless steel.

Louvres (Optional)

Louvres are primarily used to reflect light downwards to cut down glare. They are ideal for pedestrian walkways and driveways.

Lenses

Generally, either slotted or square. Vertical slotted cutouts are best suited where vandalism is a potential problem. Square cutouts offer maximum illumination.

Lighting Arc (Slimline & Ambassador)

Either 180° (half circle) or 360° (full circle). 180° lighting is more suitable for lighting walkways while 360° lighting is best in a plaza or park.

Power requirements & installation

Mains 240V, earthed. All electrical components are manufactured to Australian standards. All wiring and electrical connection work is to be carried out by a licensed electrician.

24V lamp options are also available, and provide lower power consumption, longer service life and improved safety. Investigation of wiring requirements should be made with a licensed electrician.

> *Refer to the table on p56 for a guide to lamp selection.*

Typical Features

Slimline 150NB illustrated

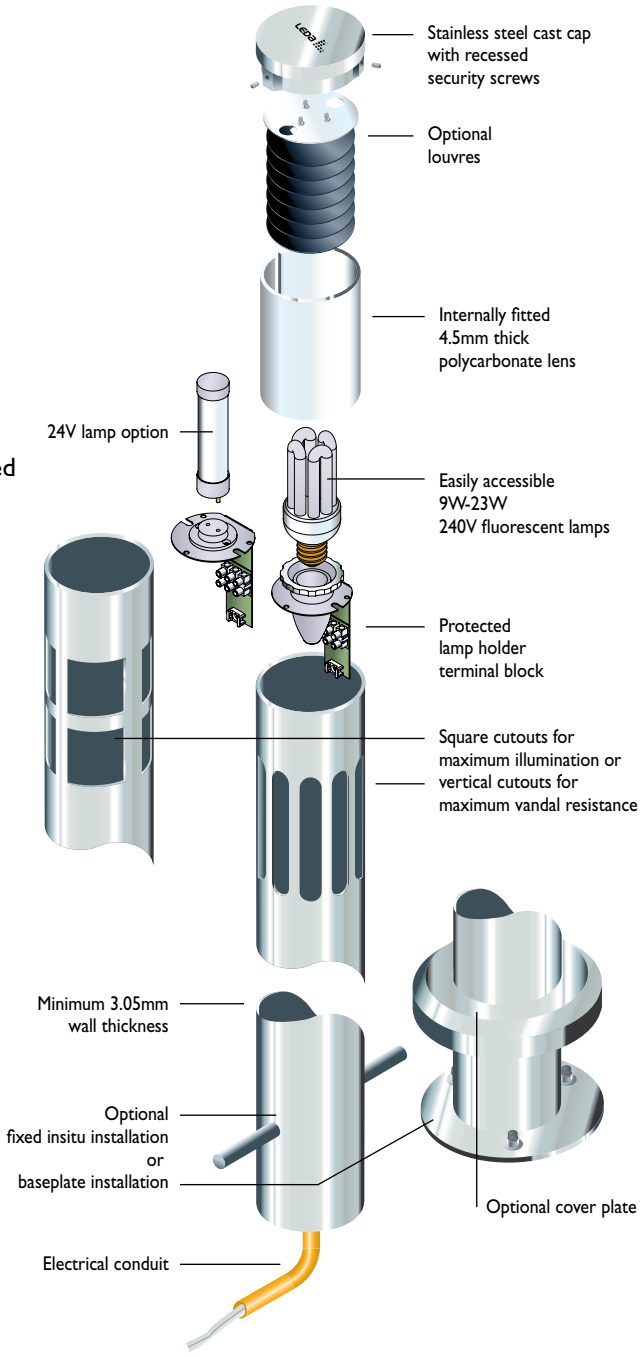

Vandal Resistant Models

The Slimline stainless steel Lighting range can also be manufactured to provide a security option. Often kicked or hit with hard objects by vandals, the tops of the bollards tend to fall off or sustain permanent damage to the lens, louvres or paint finish.

Architects and many government utilities highlighted this massive vandalism problem with existing lighting bollards and requested Leda, with its proven background in the design and manufacture of security bollards, to develop a vandal resistant lighting bollard.

The stainless steel 150NB model using slotted lens is even tough enough to be vehicle impact rated against ram-raids.

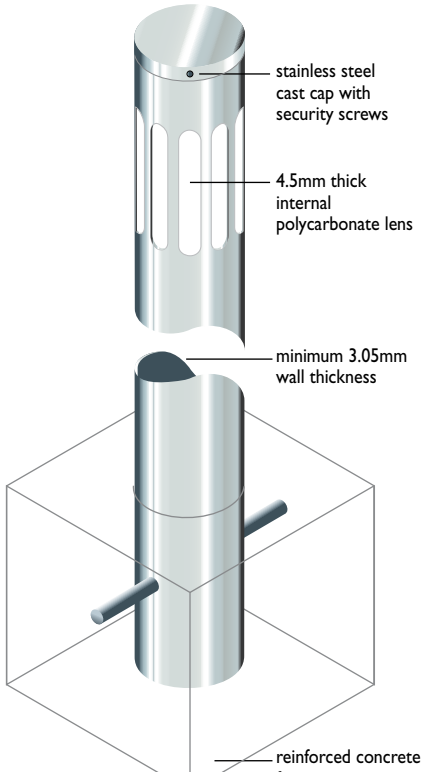

Installation

Most Leda lighting bollards can be either cast in (fixed insitu) or bolted down (fixed baseplate). Conduits containing mains power cables should be laid when forming up the concrete slab or footing, with provision for cables to be left protruding an additional one metre to allow efficient length for later connection and future maintenance.

Please contact your Leda sales office for further information on installation or technical advice.

General Maintenance

Access is only available using security tools provided by Leda. Lamp replacement does not require a licensed electrician as no electrical components are exposed during this operation.

Typical Installation Details

RC Strip & Individual Footings
Slimline 150NB illustrated

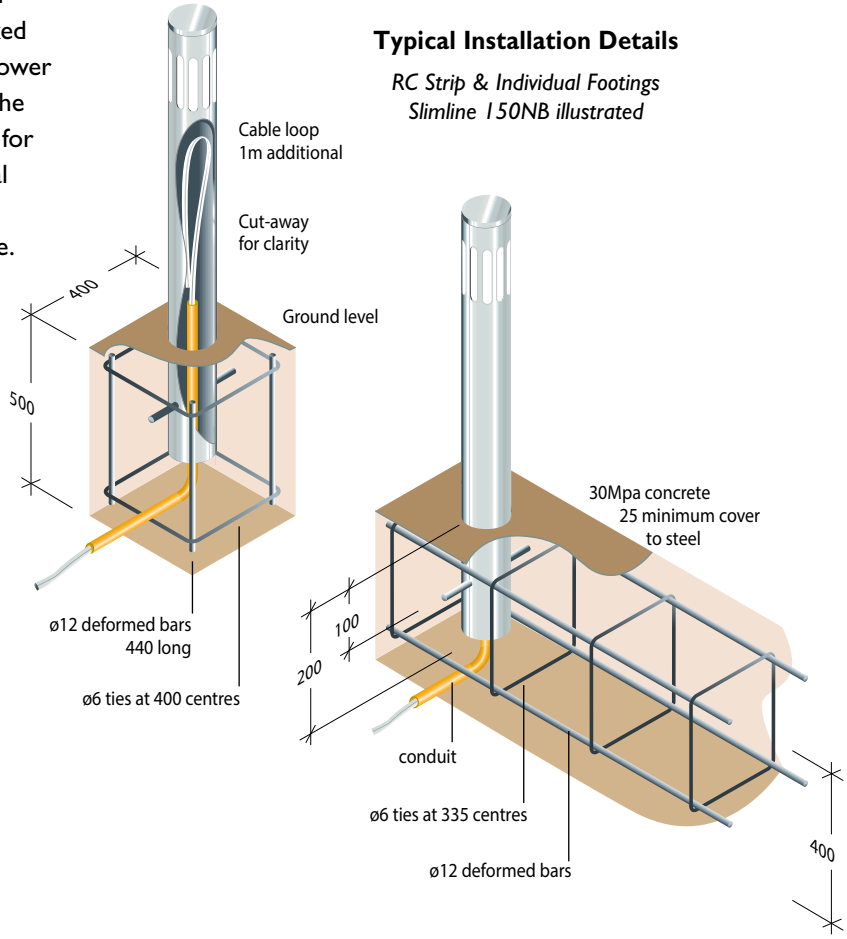

While material selection and fixing methods may be major factors in selecting a lighting bollard design, it is also important to consider lighting options for particular applications.

Optional louvres and a choice of lamp sizes coupled with bollard spacing allows for a range of light intensities to suit feature lighting, safety or security applications.

The table opposite is intended as a guide in selecting lighting bollard options to suit your requirements.

A GUIDE TO LAMP SELECTION

Watts	Lamp specification	Ballast type	Constant temp rating	Approx lamp life	Bollard sizes	Application
9	Compact lamps ES TC S	Self ballasted	90°C	5,000-10,000 hrs	80 & 150NB	Anywhere
13	Compact lamps ES TC D	Self ballasted	90°C	5,000-10,000hrs	80 & 150NB	Anywhere
23	Compact lamps ES TC D	Self ballasted	90°C	5,000-10,000hrs	80 & 150NB	Anywhere

Isolux diagrams

Isolux diagrams indicate the distribution of illuminance on a visible surface. Lines indicated (Maintained Horizontal Illuminance) are those tabled in *A guide to lighting bollard spacing* on the following page. The lighting bollard is located perpendicular to the plane. All distances are shown in metres.

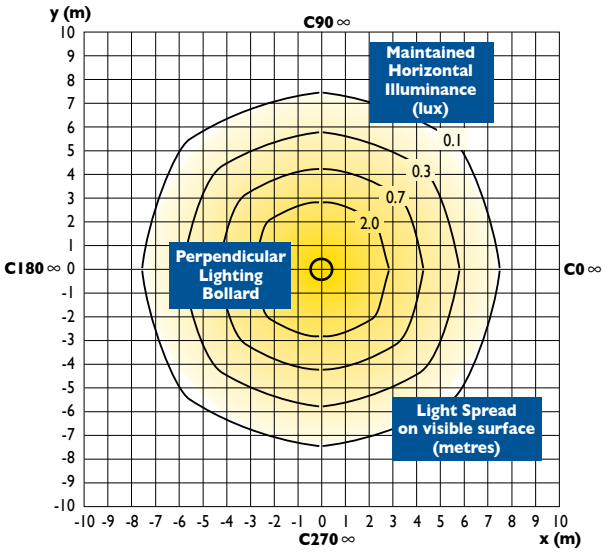

Definitions

Lumen (lm) — light emitted in a unit solid angle from a point source.

Lux (lx) — a unit of illumination defined as one lumen (lm) per square metre.

Lighting Arc

180° semi-circular
suitable for walkways and cycleways

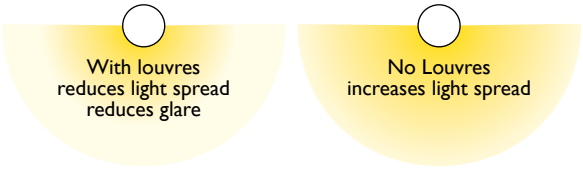

360° circular
suitable for plazas and parks

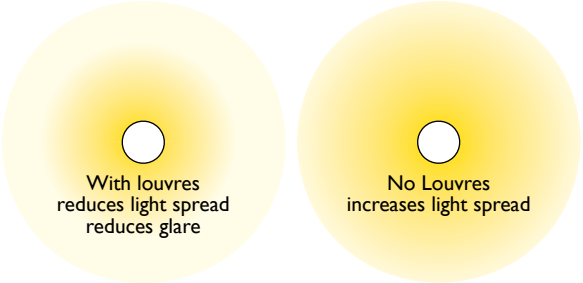

The following bollard spacing guide is designed to give specifiers a general insight into recommended minimum bollard spacings.

For further information, it is recommended to refer to the standard on which this guide is based:

AS/NZS1158.3.1:1999
Road lighting - Pedestrian area (category P) lighting - Performance and installation design requirements.

Lighting designers will be able to apply the photometric data available for Leda's lighting bollards.

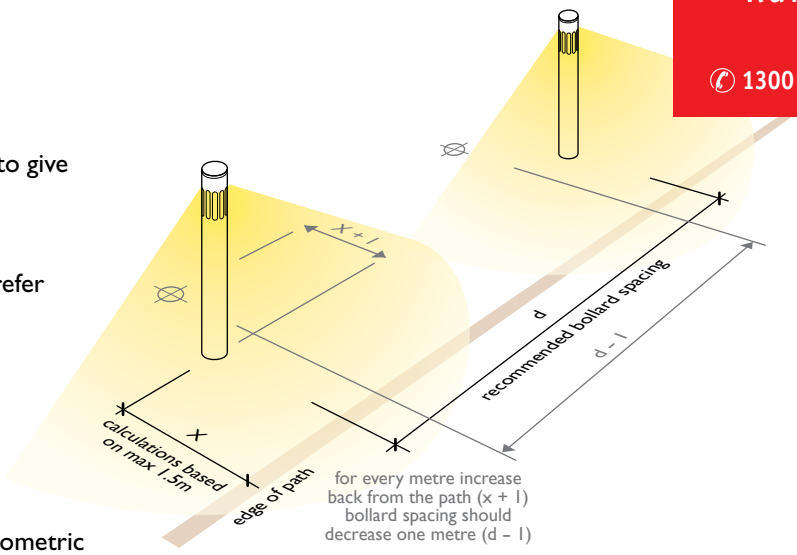

A GUIDE TO LIGHTING BOLLARD SPACING

LAMP	9W	13W	23W	32W
LUMENS	600	900	1800	2400

Selection Criterea				Spacings in metres							
Pedestrian cycle activity	Risk of Crime	Need to enhance prestige	Maintained Horizontal Illuminance	With Louvres	No Louvres	With Louvres	No Louvres	With Louvres	No Louvres	With Louvres	No Louvres
Slotted 360 degree cut outs											
N/A	High	N/A	2.00	2.1	2.1	2.5	2.5	3.0	3.2	3.4	3.7
High	Medium	High	0.70	3.1	3.4	3.5	3.9	4.1	5.0	4.5	5.6
Medium	Low	Medium	0.30	3.8	4.8	4.39	5.4	5.3	7	5.7	8.2
Low	Low	N/A	0.14	4.8	6.2	5.4	7.2	6.4	9.1	6.9	10.3
Slotted 180 degree cuvt outs											
N/A	High	N/A	2.00	4.2	4.2	5.0	5.0	6.0	6.4	6.9	7.5
High	Medium	High	0.70	6.2	6.8	7.0	7.9	8.3	10.1	9.1	11.3
Medium	Low	Medium	0.30	7.8	9.6	8.7	10.9	10.6	14.0	11.4	16.4
Low	Low	N/A	0.14	9.6	12.4	10.8	14.5	12.8	18.2	13.8	20.6
Square 360 degree cut outs											
N/A	High	N/A	2.00	2.5	3.0	2.9	3.4	3.5	4.3	3.7	5.1
High	Medium	High	0.70	3.4	4.5	3.8	4.9	4.6	6.0	5.0	6.6
Medium	Low	Medium	0.30	4.3	5.6	4.7	6.3	5.7	7.5	6.1	8.4
Low	Low	N/A	0.14	5.2	6.9	5.7	7.6	6.9	9.3	7.2	10.5
Square 180 degree cut outs											
N/A	High	N/A	2.00	5.0	6.0	5.8	6.8	7.0	8.6	7.5	10.2
High	Medium	High	0.70	6.8	9.0	7.6	9.9	9.2	12.0	10.0	13.2
Medium	Low	Medium	0.30	8.7	11.2	9.5	12.6	11.4	15.0	12.3	16.8
Low	Low	N/A	0.14	10.5	13.8	11.5	15.3	13.8	18.6	14.5	21.0

Selection Criteria
Select the highest level of all three criteria relevant to the site where the bollards will be installed. Example. If there is a very low risk of crime but high pedestrian and cycle activity then it is recommended that the 'Maintained Horizontal Illuminance (Eh maint) lx,' value be 0.7 lx. You will then be able to determine globe wattage, if louvres are required and the distances between each bollard.
The selection criteria and minimum lux levels are based on AS/NZS1158.3.1:1999 Tables 1.2 and 2.1. Information is reproduced with the permission of Standards Australia.

Spacing Distances
All measurements (d) are in metres and represent the maximum distances for spacing bollards in a line.

If slotted 180° bollards with no louvre and a 26W globe were to be installed in a high crime environment, the bollards should be positioned 6.4m apart to ensure a minimum of 2.0 lx level of light is maintained. Lux (lx) is the volume of light (lumens) from the light source divided by the area.

Distance from path
If a line of bollards in a medium risk of crime environment with low pedestrian and cycle activity were to be positioned 2.5m back from a path, a Square cut out 32W bollard with louvres would go from 10m to 9m spacings. Distances listed can also be used as recommended spacings across from each other. Example. A 5m wide path in a high crime risk area that requires slotted cut out bollards with louvres positioned 1.5m back from the pathway (dimension x) will be beyond the recommended maximum spacing. The maximum spacing possible is 7.4m (42W) and the bollards are at 8 metres (5m + 1.5m + 1.5m = 8m). The options are to remove the louvres or bring the line of bollards closer to the pathway (x). Example. The bollard spacings provided are based on the line being 0m - 1.5m back from the path (x). For every metre a bollard is moved beyond the 1.5m point, the spacings (d) should be bought closer together by the same amount (1 for 1). The recommended distances (based on AS/NZS1158.3.1:1999) are calculated from photometric testing conducted by independent laboratories for Leda Security Products Pty Ltd. Further photometric data is available on request.

Architectural Range > Lighting

Slimline 150

Slotted

Material / Finish

Aluminium 150NB (165.1mm) x 3.00mm aluminium pipe
Electrostatically powder coated in a range of colours

Stainless Steel 150NB (168.3mm) x 3.4 / 7.11mm Grade 304 SS pipe
Linished or electro-polished

Steel 150NB (165.1mm) x 5.40mm galvanised mild steel pipe
Electrostatically powder coated in a range of colours

Fixed Insitu Security Lighting
SSL150F B 7.11 (2/3) 1
SSL150F C 10.97 (2/3) 2

FAL150F2 180° FAL150F3 360°	Aluminium	FAL150B2 180° FAL150B3 360°
SSL150F2 180° SSL150F3 360°	S/Steel	SSL150B2 180° SSL150B3 360°
FS150F2 180° FS150F3 360°	Steel	FS150B2 180° FS150B3 360°

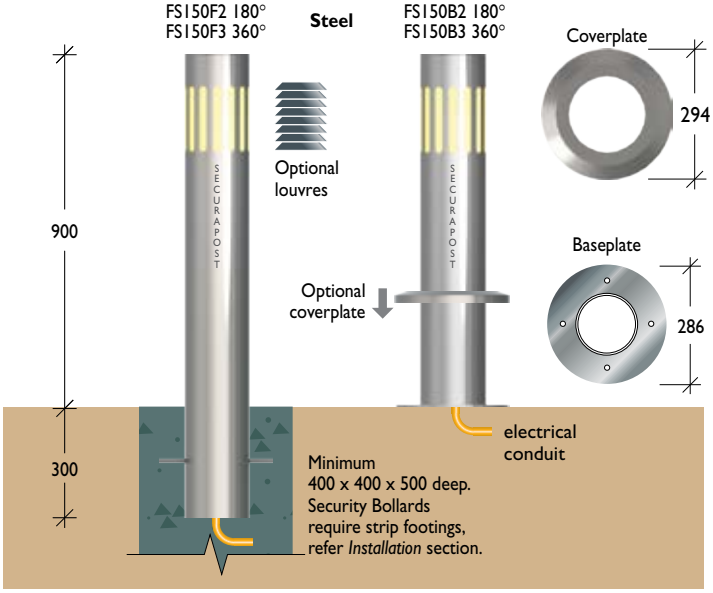

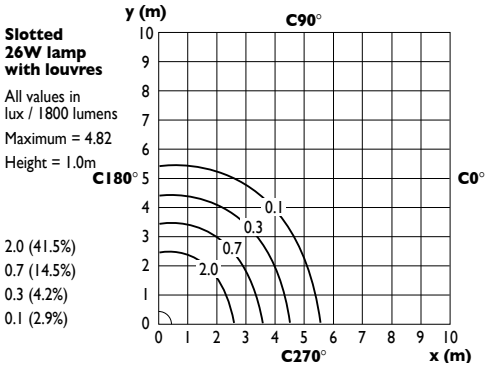

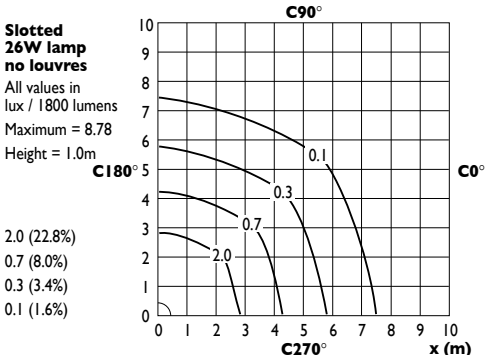

Square

Fixed Insitu Security Lighting
SSL150F B 7.11 (4/5) 1
SSL150F C 10.97 (4/5) 2

FAL150F4 180° FAL150F5 360°	Aluminium	FAL150B4 180° FAL150B5 360°
SSL150F4 180° SSL150F5 360°	S/Steel	SSL150B4 180° SSL150B5 360°
FS150F4 180° FS150F5 360°	Steel	FS150B4 180° FS150B5 360°

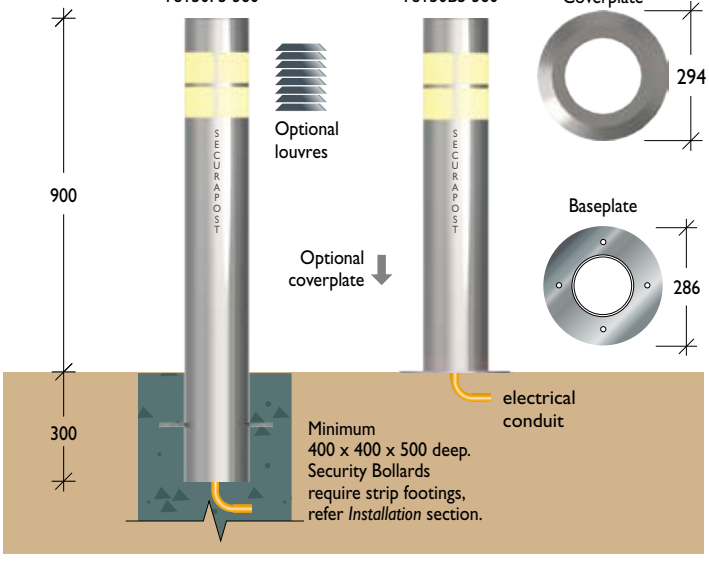

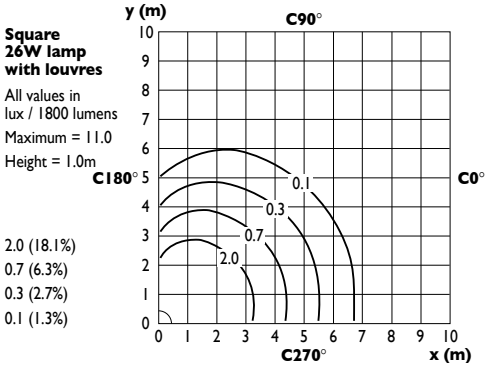

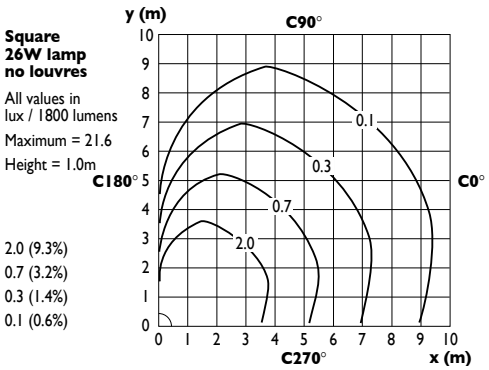

Slimline 80 Slotted

Material / Finish

Aluminium 80NB (88.9mm) x 3.25mm aluminium pipe
Electrostatically powder coated in a range of colours

Stainless Steel 80NB (88.9mm) x 3.05mm Grade 304 SS pipe
Linished or electro-polished

Insitu Lighting

Aluminium	Stainless Steel
FAL80F2 180°	SSL80F2 180°
FAL80F3 360°	SSL80F3 360°

Baseplate Lighting

Aluminium	Stainless Steel
FAL80B2 180°	SSL80B2 180°
FAL80B3 360°	SSL80B3 360°

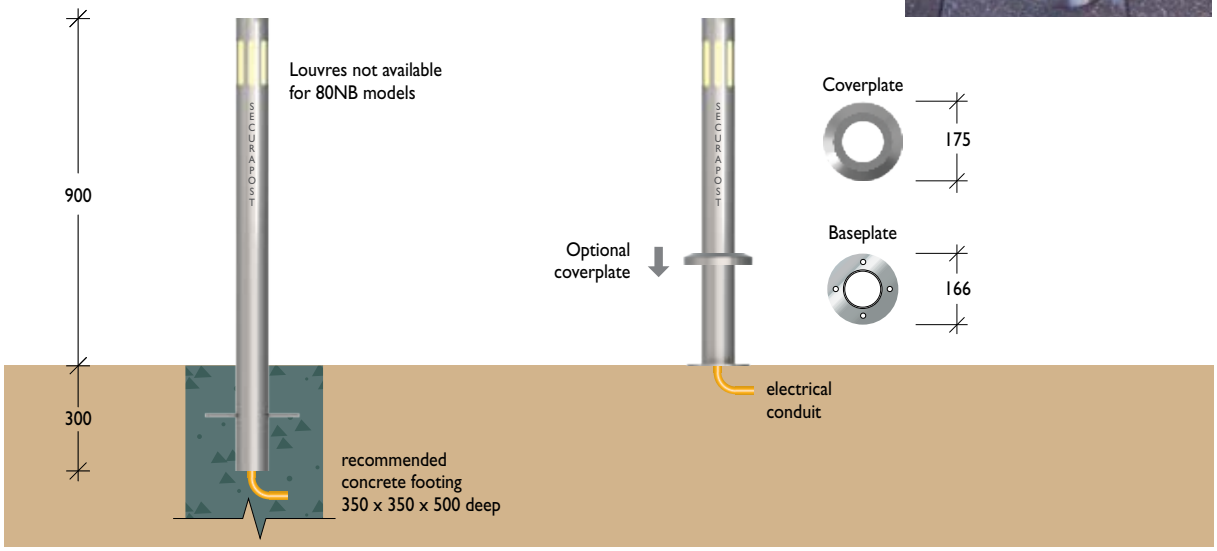

Screen

Material Grade 304 stainless steel mesh

Finish Linished (Level 4)

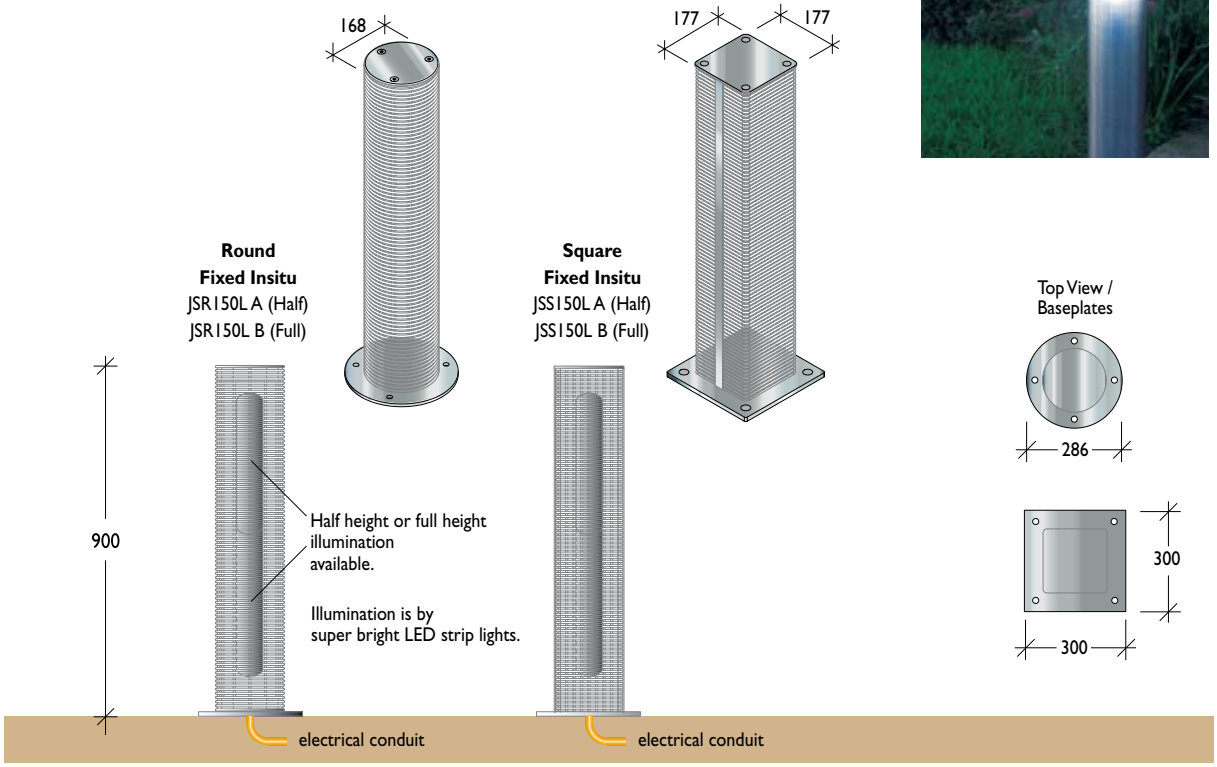

Solar
Fixed Insitu

Material 100NB (114.3) x 3.05mm grade 304 stainless steel pipe
100NB (114.3) x 3.00mm aluminium pipe

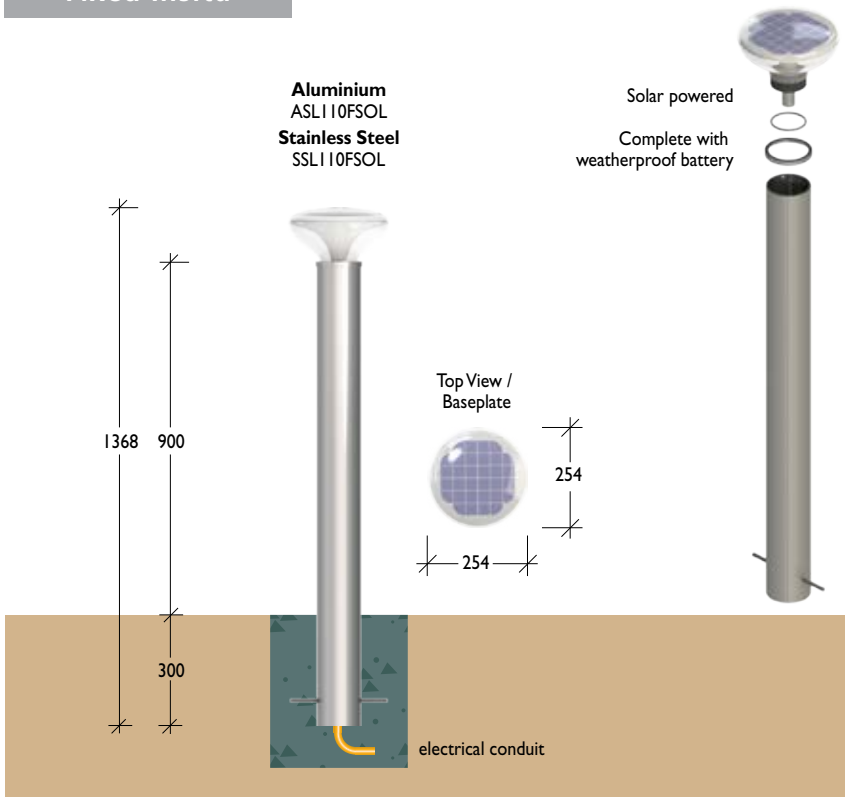

Baseplate

Material 100NB (114.3) x 3.05mm grade 304 stainless steel pipe
100NB (114.3) x 3.00mm aluminium pipe

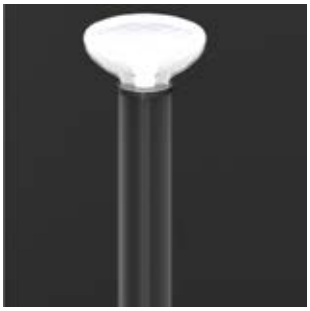

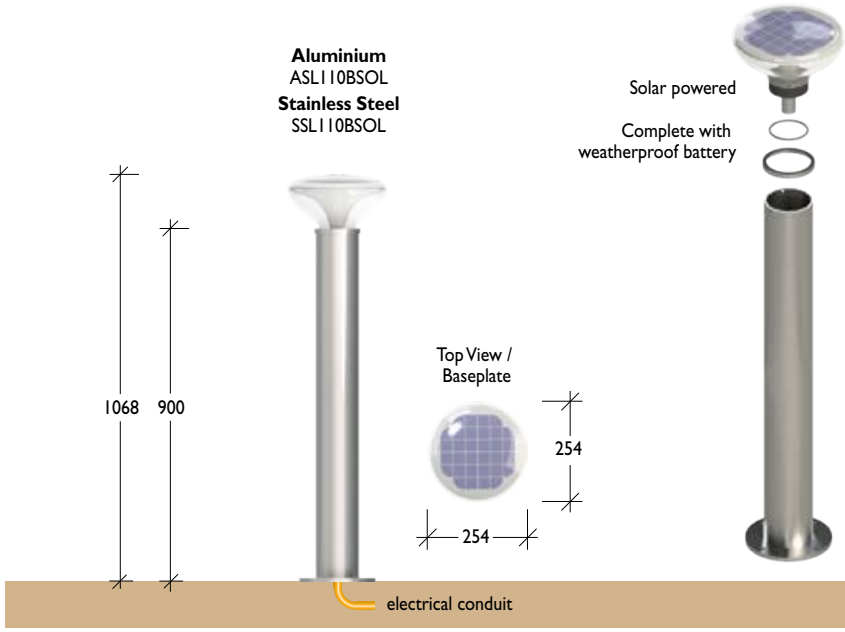

Note: These solar powered bollards are designed to be installed in direct undisrupted sunlight from dawn until dusk, try to avoid shading from trees or other structures when positioning the bollards.

Urban

Square Light

Material Mild steel – 150 UC mild steel
Stainless steel – 10mm plate
Hardwood – Range of options available

Finish Hot dipped galvanised / linished (Level 4)

Please contact nearest LEDA Sales office to discuss material & type of Hardwood available.

Mild Steel
URB2L A
Stainless Steel
SURB2L A

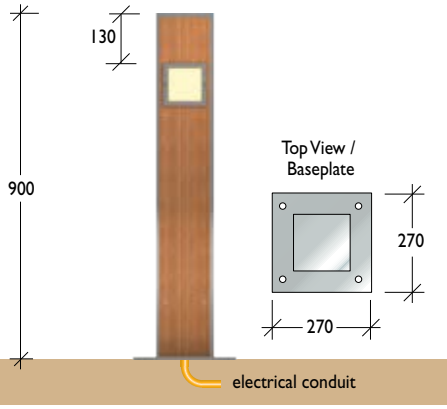

Illumination is by a super bright LED array in a single direction. A second lamp can be added to illuminate in the opposite direction – add 'D' to end of the bollard code.
Mild Steel URB2L A D
Stainless Steel SURB2L A D

Round Light

Mild Steel
URB2L B
Stainless Steel
SURB2L B

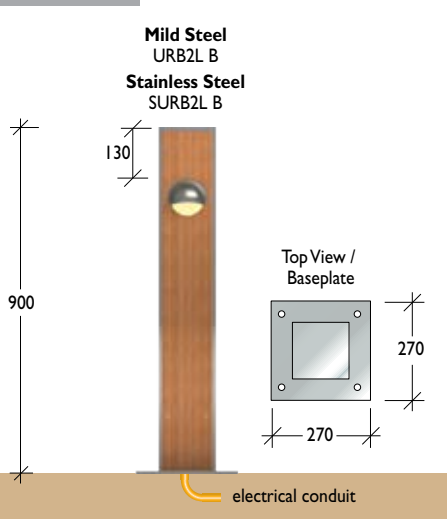

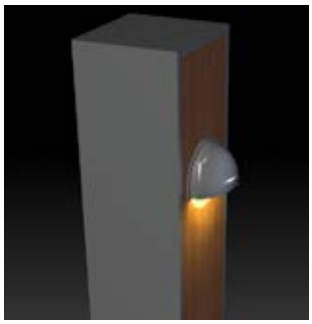

Illumination is by a super bright wall light in a single direction. A second lamp can be added to illuminate in the opposite direction – add 'D' to end of the bollard code.
Mild Steel URB2L B D
Stainless Steel SURB2L B D

Slot Light

Mild Steel
URB2L C
Stainless Steel
SURB2L C

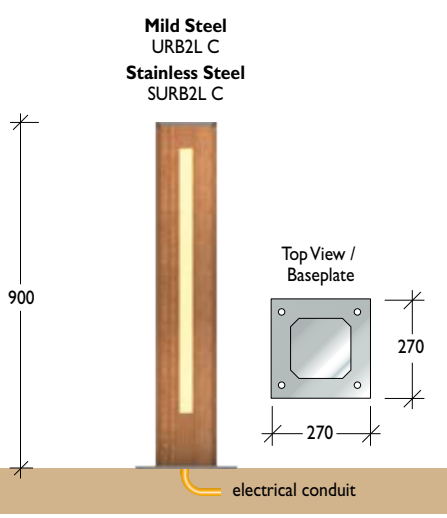

Lighting is provided on four faces by a super bright LED strip light to provide 360° illumination.

Security Bollards

Leda is Australia's largest manufacturer of security bollards widely used to provide physical protection to most of the country's landmarks, government buildings and utilities, defence sites, critical infrastructure and many sites that cannot be identified for security reasons.

This has not always been the case as Leda's origins are based in perimeter security protection against ram raids and preventing motor vehicles from illegally entering or leaving an area or building. Over 250,000 of the highly recognisable ***Securapost*** security bollards having been installed across Australia.

This knowledge and experience has been applied to developing a range of high security bollards where security levels have been increased to accommodate and prevent possible terrorist attacks.

Security Bollard Solutions

- Car space protection
- Access control
- Perimeter security
- Ram raid protection
- Terrorist proofing of buildings

Leda has prepared impact ratings for all standard security bollards – higher security is achieved by a combination of varying bollard diameters, wall thickness and embedments.

> *Refer to the table on p73 for an overview of the relative strengths of Leda security bollards.*

Intro 1
Architectural 8
Stainless 12
Aluminium 28
Timber 32
Pre-cast 35
Steel 42
Plastic 48
Lighting 52
Security 62
Designing 63
Impact Rating 65
Installation 68
Products 74
Retractable 98
HVM Bollards 99
VAC Bollards 107
Industrial 112
Bollards 113
Power 124
Card Readers 128
General 134
Accessories 137
Codes Index 144

As stressed in other sections of this Handbook, it is most important to select the appropriate bollard for a project, particularly in security applications.

The information on the following pages will help in identifying the impact resistance required, and the correct selection of the bollard solution.

Bollards used in security applications are typically deployed as either Static Bollards or Active Bollards.

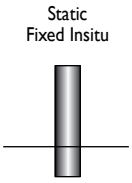

Static or Fixed Bollards

Static Bollards forming part of a passive security barrier are used mainly to enforce a stand-off measure while complementing and enhancing an urban landscape. They may also be used to define a secure perimeter zone.

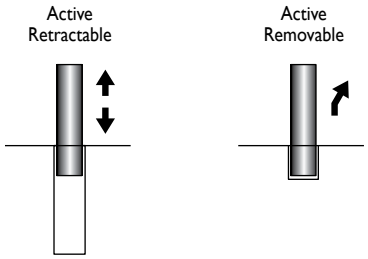

Active Bollards

Active Bollards, sometimes called 'Automatic Bollards' (while not always the case), are automated or manual retractables or removable bollards. Active Bollards are mainly deployed at vehicle access control points, or emergency access points.

Ative Bollards may be operated as follows:

a) Automatic. Featuring a drive mechanism (pneumatic or hydraulic) which allows the bollard to rise or lower through instructions relayed through a Programmable Logic Controller (PLC).

b) Manual. This typically involves an operator lifting or lowering a retractable bollard by hand or using an electric power drill to wind the bollard up or down. A subset of this version includes a gas-assisted type bollard which greatly reduces the effort required by the operator to raise or lower the bollard.

c) Removable. An embedded bollard secured in position by a mechanical lock, and removed by hand.or for heavier bollards, by lifting trolley.

Bollard Configurations

Single line of bollards

Represents the most common method of deploying bollards, which in turn act as an enforceable stand-off line. This is typically the most cost effective configuration to deploy.

Vehicle Sally Port or Interlocking Bollards

Used to create a containment arrangement with inner and outer active barriers into which vehicles must drive through. PLCs are used to prevent both sets of bollards remaining open simultaneously. This solution offers a much higher degree of security but reduces vehicular flow.

Final Denial Bollards

This bollard configuration (with or without an access control barrier) is usually left in the open position so as not to hamper the flow of traffic. Used in locations where available room and standoff are not an issue but where traffic flow and ease of movement is. It relies on the proviso that adequate time is available for a guard force to engage a potential hostile vehicle and to raise the bollards.

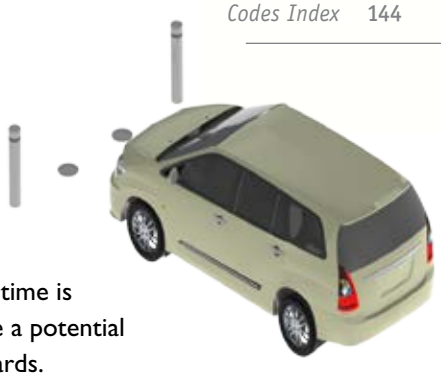

Modern day threats have seen rapid development of vehicle barrier systems capable of resisting impacts from vehicles of different sizes, speeds and attack methodologies, resulting in a further split of bollards into the following categories and security levels.

1. Access Control Bollards

Typically used to allow consensual access into a secure area but are not designed to sustain impact from a vehicle driven with hostile or criminal intent.

2. Anti-ram Bollards

Typically used on sites where there is a need to control consensual vehicles but to also deter and prevent unauthorised access. These bollards tend to be physically robust in appearance but may be an engineered solution option and not necessarily have been formally tested against vehicle impact. They are used widely across most commercial applications such as shopping centres, retail outlets and car yards.

3. Counter-terrorist Bollards

Bollards which are typically designed for the stopping and retention of hostile vehicles to mitigate threats from vehicle-borne improvised explosive devices (VBIED). Such bollards are mainly used to secure high security sites – sensitive government installations, airports, embassies and the like – and are typically subject to vehicle crash tests in compliance with independent government-administered standards such as PAS68 (UK)* or ASTM (USA). *Refer p66.*

Alternatively, there is the option of engineering solutions to meet the anticipated threat. Both have control protocols embedded as part of any project delivery initiative to ensure they are installed in compliance with the test parameters.

The following information is intended as a guide to establishing the impact rating of the bollard solution by determining the likely weight and speed of a vehicle threat.

a) Definition of a threat vehicle and method of attack

It would be prudent during a threat assessment to determine a potential type of vehicle likely to attack the site. Typical benchmarks such as access into the site, speed and orientation will usually have significant bearing towards building a threat profile. For example, a shopping centre with ATMs located on a floor with direct vehicle access can potentially expect a smaller vehicle capable of ramming an ATM at speeds unlikely to injure or kill its driver, while obstacles such as restricted overhead clearance, planters and courtesy benches will typically form obstructions against larger vehicles.

Once a potential attack vehicle profile is established, an assessment may be made on the vehicle's estimated weight to determine the bollard required.

b) Vehicle dynamics assessment to establish vehicle mass and impact speed.

Speed and vehicle mass form a critical area when assessing the type of bollard and its corresponding footing to deploy. The transfer of force in the form of kinetic energy (KE) when a vehicle engages with a bollard is a key determinant dictating the type, size, wall thickness and footing design of any proposed bollard. A simplified but somewhat imperfect description of KE, measured by kilojoules (kJ) in the following table provides a rough view of energy loads which need to be considered.

Impact Speed (km/h)	Vehicle Mass (kg)				
	1500	2500	3500	7500	30000
	Impact Energy (kJ)				
16	15	25	35	74	296
32	59	99	138	295	1185
48	133	222	311	667	2667
64	237	395	553	1185	4741
80	370	617	864	1852	7407

Kinetic energy can be determined with the following:

$KE = 0.5\ mv^2$

Where: KE = kinetic energy
m = mass in kilograms
v = velocity in metres per second

Example: A 2500kg vehicle travelling at 40km/h will have a kinetic energy of 154kJ.

$KE = 0.5 \times 2500 \times (40{,}000 \div (60 \times 60))^2$
$= 0.5 \times 2500 \times 123.432$
$= 154{,}290J$ or 154kJ

c) Identification of an enforceable perimeter to determine bollard location.

Locating bollards in a suitable and appropriate manner is a necessary condition in getting maximum benefit from your proposed installation.

Suitably-located bollards can enhance a streetscape, allow pedestrian access and establish a clear demarcation line. Inappropriately located bollards may impede both vehicular and/or pedestrian flow.

Impact Testing

Leda has been actively involved in designing and testing its physical security products for more than fifteen years. Testing programs have been conducted both in Australia and in the United Kingdom providing invaluable data for Leda's engineers and project managers. During this time, Leda has developed the largest range of engineered and vehicle impact tested high security bollards available in Australia.

Leda is able to offer two levels of certified security ratings for high security bollards where vehicle weight and speed are part of the equipment specification.

There are two widely recognised standards:

1) BSI. PAS68 & PAS69 – from the UK.

PAS68 TESTED

PAS68 2010 evolved to address the needs of governments, security consultants and organisations in the UK who wished to have the assurance that vehicle security barriers or bollards will provide the level of security sought.

Published by BSI (UK), the standard was developed to set out the test criteria for hostile vehicle mitigation products and caters for the wide range of products and systems that are considered for use as vehicle security barriers.

It is a rating system designed to accommodate many different products by recording through testing:

- Vehicle size and weight
- Vehicle speed
- Penetration
- Debris dispersal
- Performance of the installation and post impact condition.

PAS69: 2006 provides guidance for installing the barriers or bollards.

2) ASTM – from the USA (K4-12 DOS standard).

Trucks designed and manufactured in the US and tested under the ASTM standard are not readily available in Australia and the behaviour of the vehicle during impact testing is significantly different to vehicles manufactured in Europe and ASIA.

So while there is no problem with USA vehicles the predominant test standard used in Australia is the PAS68 from the UK. Both standards are still evolving and we believe in time may converge, but for now the PAS68 standard is preferred by Australian security consultants and government departments.

Securapost Bollards tested to PAS 68 Standard

In what is believed to be a world first in the application of barrier materials technology in bollards, Leda Security has successfully impact-tested their 150NB fixed bollards at the Transport Research Laboratory (TRL) in the United Kingdom.

Testing was carried out by TRL in compliance with Publicly Available Specification 68 (BSI PAS 68). One key objective was for the creation of a new generation of physically smaller bollards capable of providing enhanced impact protection against terrorist-instigated hostile vehicle attacks.

The tests each involved a single-sized 150NB stainless steel fixed bollard filled with a Leda-designed barrier mix to strengthen it under impact and to enhance its cutting resistance.

> Refer this section for further information on Barrier-infill bollards p87.

With the bollards mounted in a shallow rigid foundation, two successful tests were conducted at 48km/h using firstly a 2500kg 4x4 SUV vehicle and then a 3500kg van. A third test with a shallow embedment bollard proved ineffective in restraining the impacting vehicle, highlighting the critical importance of footing design.

The final successful test was with a 7500kg truck travelling at 32km/h.

Leda gratefully acknowledges the support provided by the government of the United Kingdom in the course of this testing.

Above, 2500kg, 3500kg and 7500kg vehicle crash tests. Leda is the only Australian bollard manufacturer to have undertaken government-endorsed impact testing using different vehicle weights at various speeds.

Engineered Solutions

There are potentially two options:

- Alterations to a PAS68 product due to site or requirements, or
- Designing site specific bollard systems (to meet vehicle impact weight, speed and specifications). These bollards are engineered and not impact tested.

In a perfect world, we should impact test every security bollard design and then install it identically on site. More often than not however, site considerations dictate changes that can be due to variations such as soil conditions, road camber, underground services, width or height changes, aesthetic requirements or cost considerations.

The PAS68 standard itself allows for engineered solutions under certain circumstances and in these instances, Leda uses UK-based Civil Engineering firms actively engaged in the CPNI Hostile Vehicle Mitigation (HVM) program and who have specific experience in designing foundation footings for high security bollards and the installation of PAS68 products. This knowledge and experience is critical and needs to be emphasised.

Cost Considerations

"We like PAS68 equipment but are not sure if our Budget is sufficient to cover the cost."

Leda appreciates and understands the problem and has staff with extensive experience in meeting budget restraints – a fact of life, even on government projects.

While most clients considering impact rated equipment would love to magically click their fingers and use PAS68 tested equipment, there are cost considerations that cannot be ignored. Each impact test costs between $50,000 and $100,000 and these costs need to be recouped in the product price. This makes the tested product more expensive than non-tested engineered solutions. It does however provide the certainty that the product (if installed correctly) will meet certain impact specifications.

Each year, innovations in engineering and materials technology are providing stronger, lighter weight materials, together with more cost-effective installation methods.

Quite often if it's a new site or threat, then a security budget / capital expenditure may not have been initially planned for. Engineered solutions are quite common and unlike PAS68 tested equipment, poorly installed products and installations are commonly found. This is often a 'grey area' with security that can attract unscrupulous operators taking advantage of loose specifications and using inexperienced engineers that, while well-intentioned, may not have the required expertise in this specification area.

Selecting a Security Bollard Supplier

Leda recommends the following be considered in your decision making process for engineered solutions.

The bollard supplier must be able to demonstrate greater than two years' experience in PAS68 certified bollards and their installation. They should provide references of successfully completed projects of both tested and engineered sites in your city:

- The engineering firms engaged by the equipment supplier to design the footings must have greater than two years' experience in PAS68 and engineered solutions so as to demonstrate an understanding of dynamic loads required in this field.
- If using security consultants then CPNI training in the UK or Australia for vehicle borne threats is highly recommended.
- Impact rating – vehicle weight and speed, must be clearly defined by the client.
- If you are cautious and diligent in considering various product proposals then engineered solutions done properly can be a common and cost-effective option.

Summary

As explained, PAS68 certified bollards and engineered solutions are more expensive than possible similar 'off the shelf' bollards. There is simply no point in specifying and installing PAS68 or engineered bollards unless you can be sure that the costs are justified, otherwise money can be saved by installing a standard Leda bollard.

Reinforced Concrete Footings

In security applications, it is essential that footings are designed to meet the impact resistance and performance required by the bollards – and to meet the proposed threat.

Leda's engineering division has vast experience in the design and installation of footings for perimeter security systems and can assist through all phases of planning and design.

If the bollards deployed are used in security applications, they must be installed into a reinforced beam (strip footing) that distributes the impact load. A well-designed tortionally-reinforced continuous concrete beam footing has demonstrated that actual rotation and displacement of foundations are minimal.

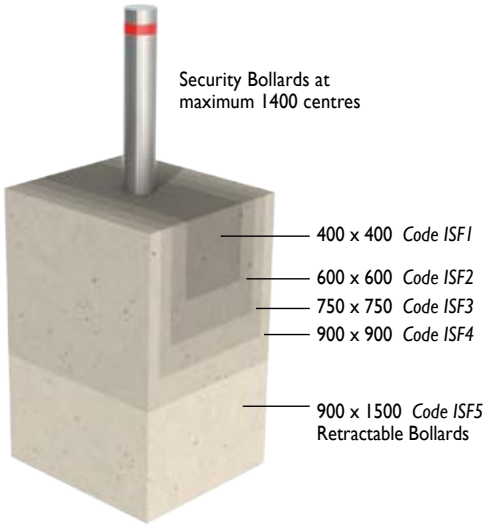

Indicative strip footing sizes

To simplify designs, dimensions will normally fall within the sizes illustrated.

Note: All footing designs should be subject to structural engineering certification.

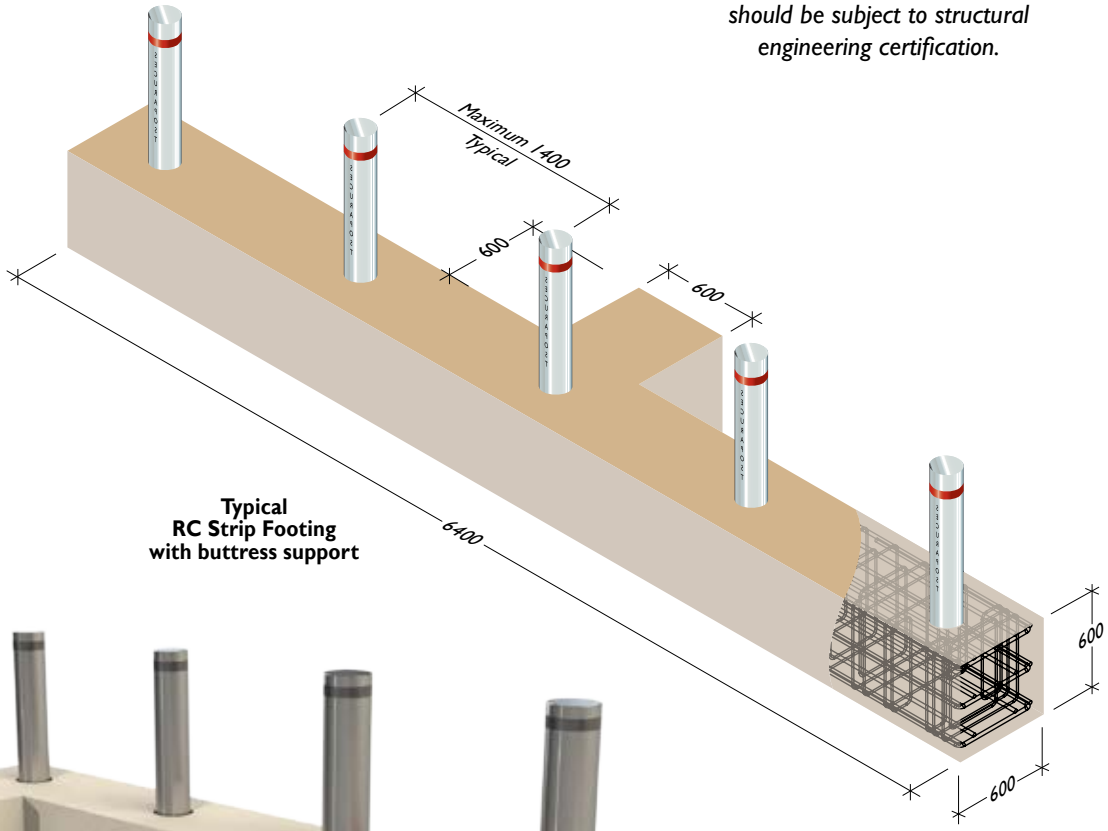

Typical RC Strip Footing with buttress support

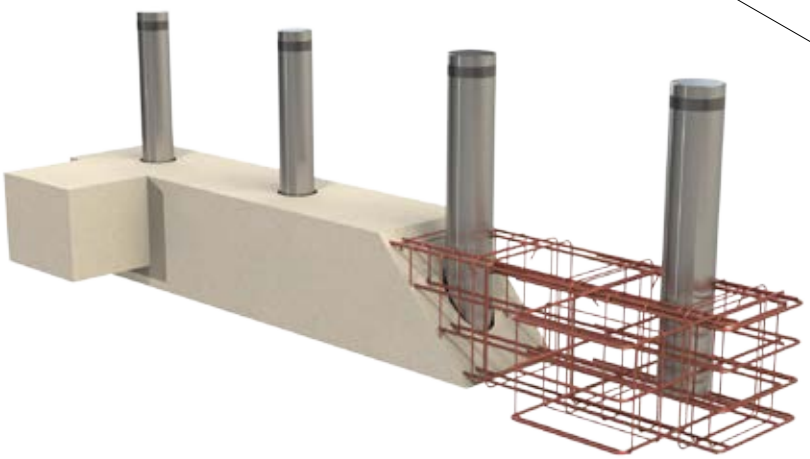

Shallow Mount Bollard Footings

The growing demand to install physical security on existing sites often means encountering sub-pavement services which may need to be relocated to accommodate conventional concrete footings. In many instances it may be impossible to obtain the required depth of footing or be able to excavate around existing services.

In designing a solution, Leda engineers have developed a cost effective alternative to conventional reinforced concrete strip footings.

Leda's shallow mount technology allows the installation of impact rated security bollards in footings just 200mm deep.

The Leda shallow mount footing design can cater for a wide variety of applications and bollard types. Currently, there are two certified systems with the following impact ratings:

SMF1425 2500kg vehicles @ 40km/h

SMF1435 3500kg vehicles @ 40km/h

Typical Section

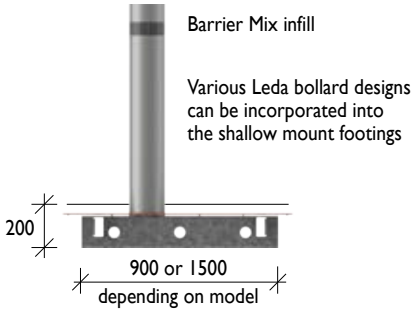

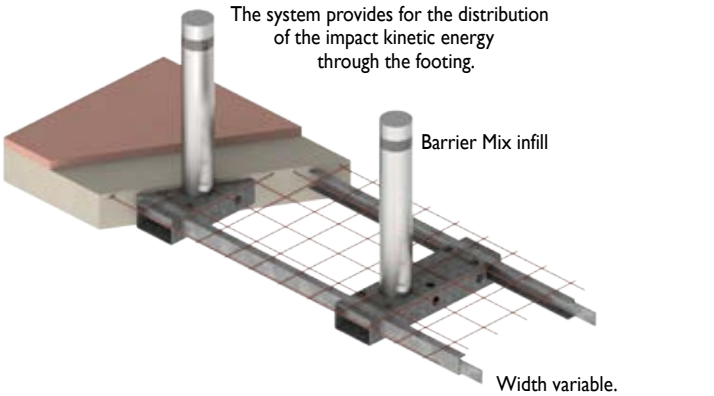

Security Range > Installation

Shallow Mount
SMF1425

Bollard Options
IBR150FC Flat Top Steel
SSP150FC Slimline Stainless Steel
SSP150FC Regal Stainless Steel

Stainless Steel Sleeves
are also available

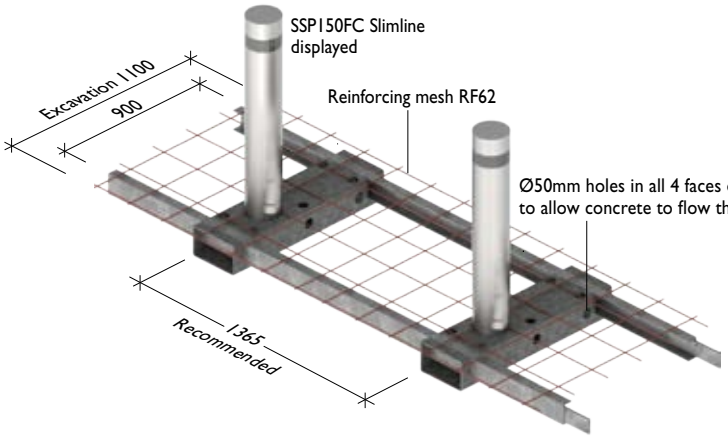

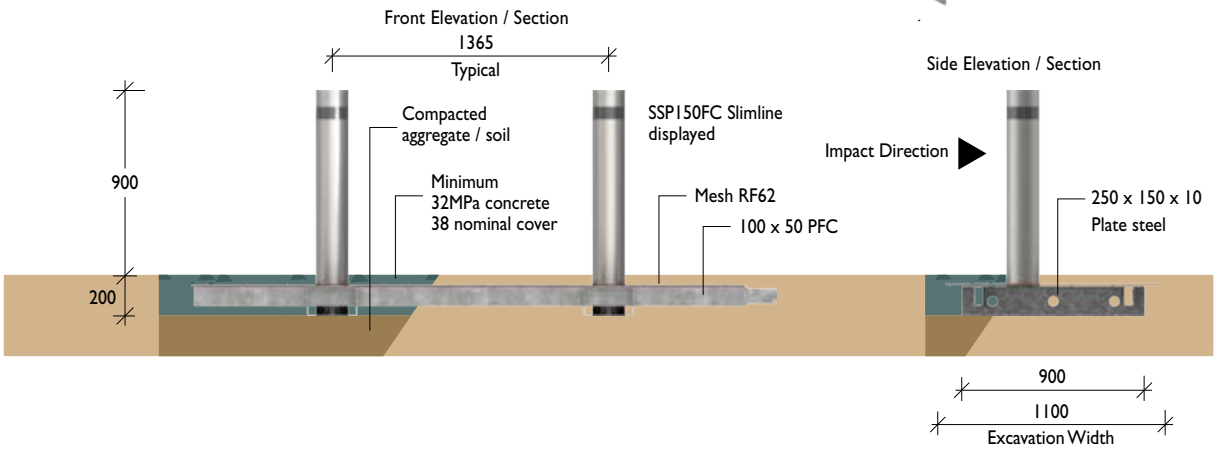

Shallow Mount
SMF1435

Bollard Options
IBR150FC Flat Top Steel
SSP150FC Slimline Stainless Steel

Stainless Steel Sleeves
are also available

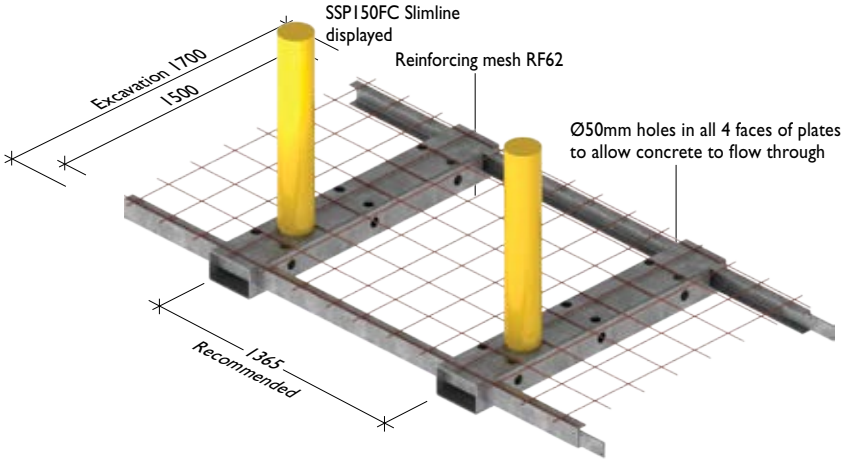

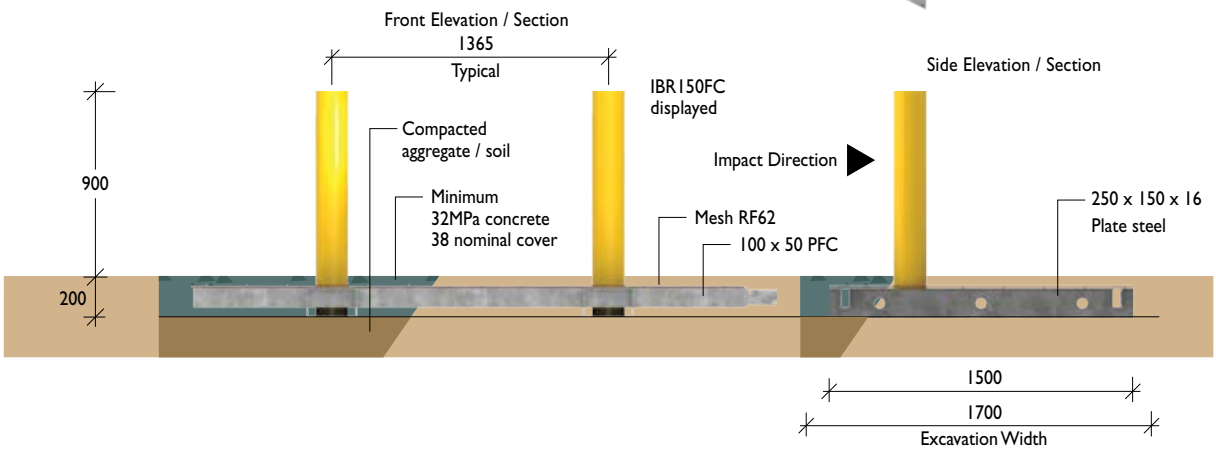

Shallow Mount
SMF2025

Bollard Options
IBR200FC Flat Top Steel
SSP200FC Slimline Stainless Steel
SSP200FC Regal Stainless Steel

Stainless Steel Sleeves
are also available

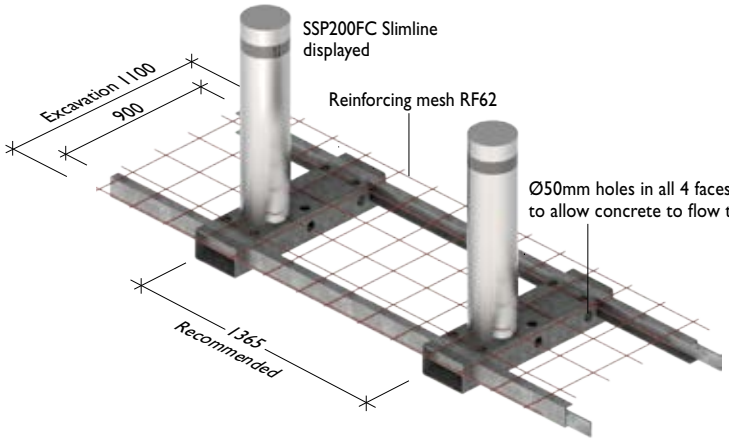

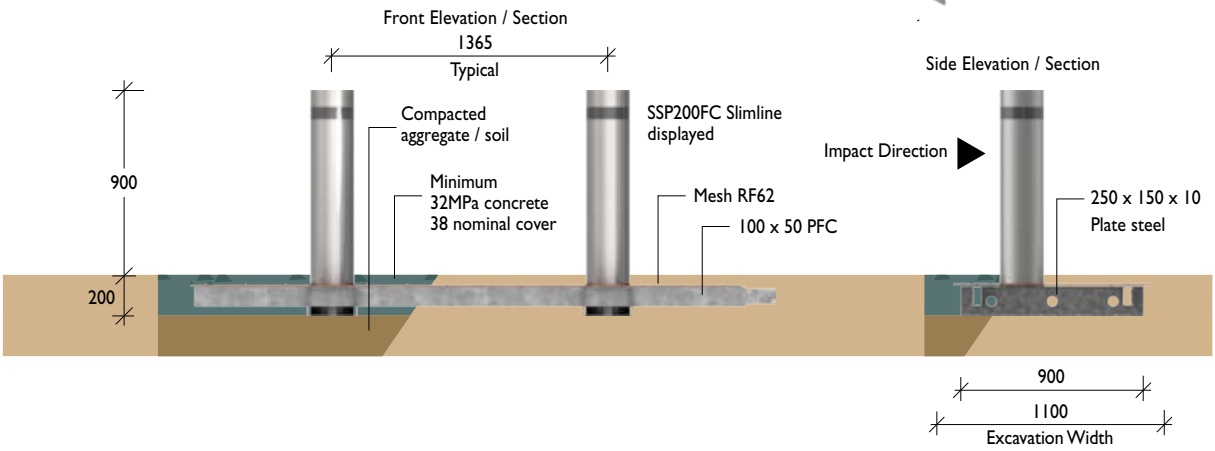

Shallow Mount
SMF2035

Bollard Options
IBR200FC Flat Top Steel
SSP200FC Slimline Stainless Steel

Stainless Steel Sleeves
are also available

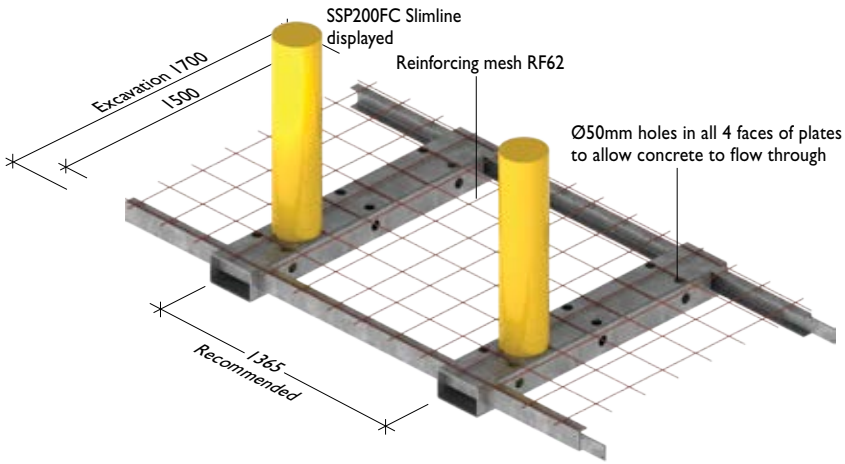

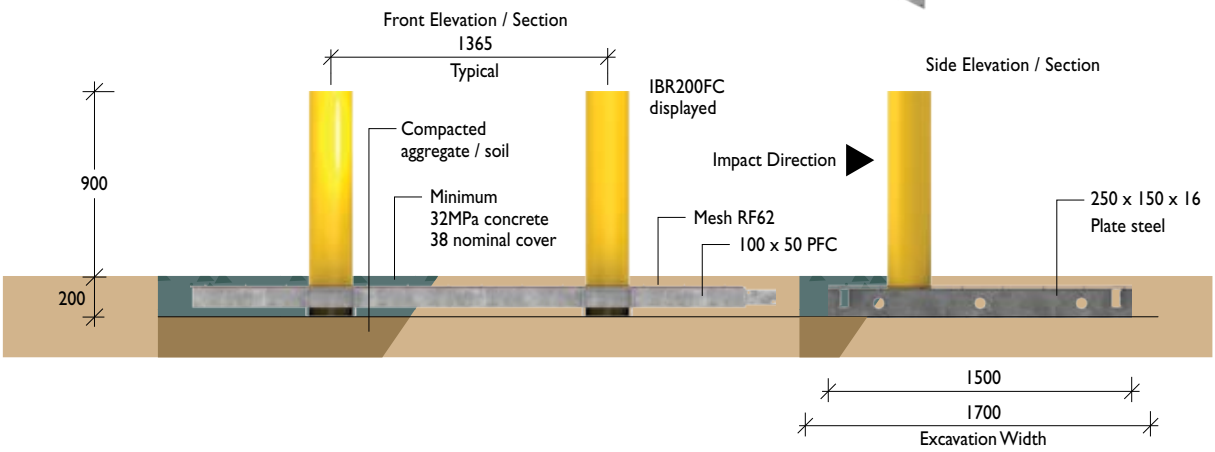

Shallow Mount
Typical Application

Installing the shallow mount system is both quick and efficient and requires minimal excavation or disruption of existing services.

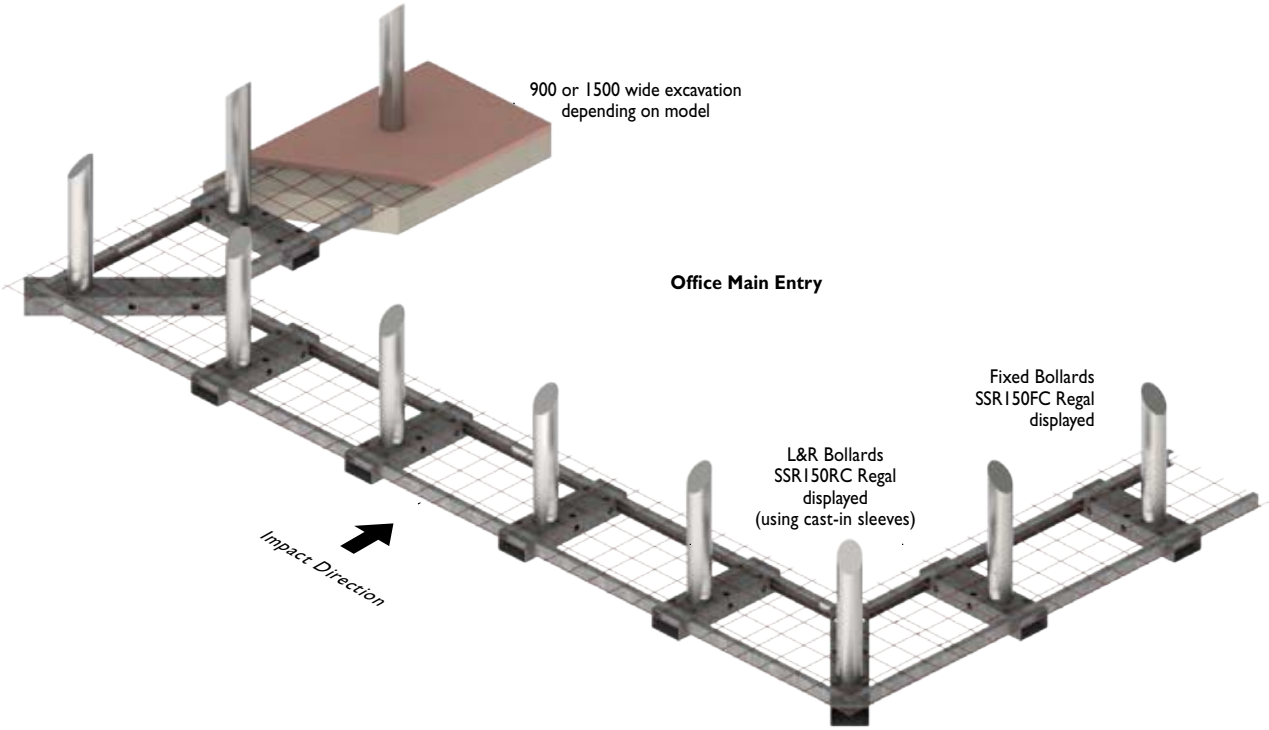

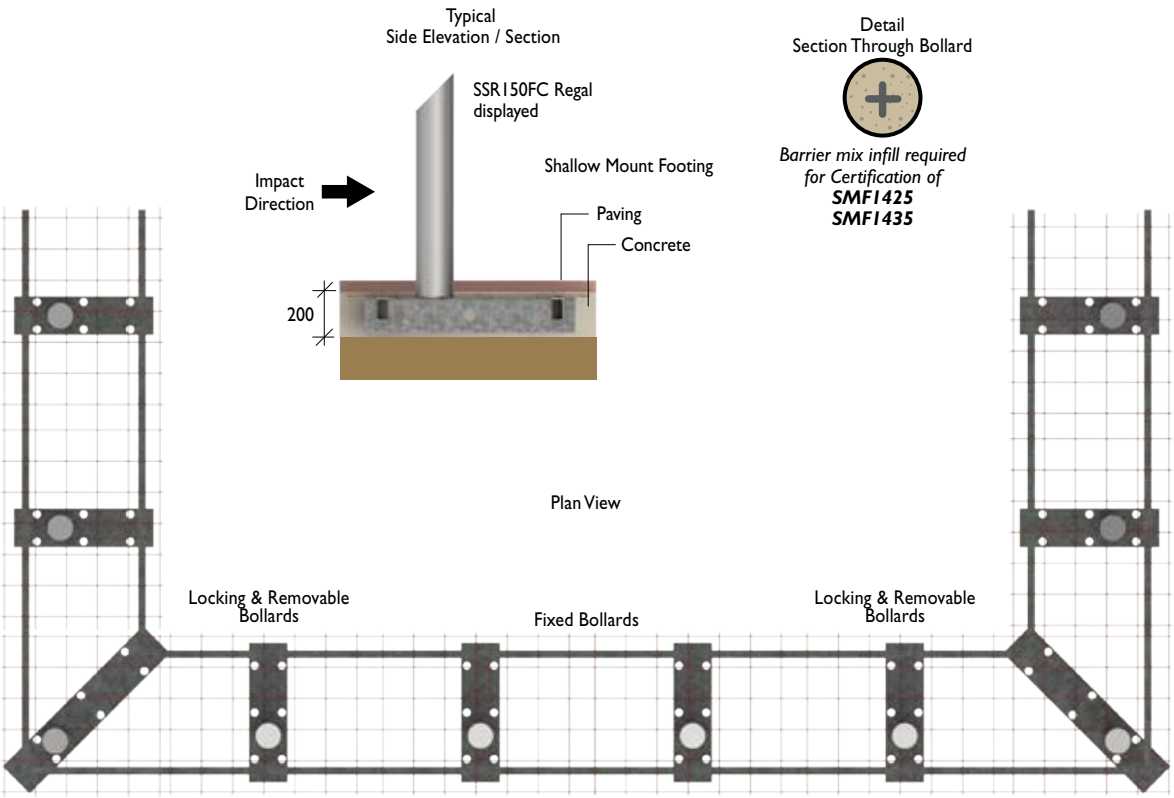

Leda will provide all reinforcement details and working drawings prior to installation.

The *Impact Ratings Table* below is intended as a quick reference guide to the relative impact resistance provided by various Leda security bollards. Impact ratings have been sub-divided into 3 Classes.

3 **Class 3 – High level protection**
Government and high profile buildings, defence sites, anti-terrorist protection.

2 **Class 2 – Medium level protection**
Used where vehicle speed is limited and other security protection provided.

1 **Class 1 – Low level protection**
Ram raid protection or where lower vehicle mass and speed are involved.

While the Table identifies specific standard models, many can be strengthened by infilling with Leda's barrier mix (*refer p86*) or re-engineered to improve their impact resistance.

Impact ratings shown are also dependant on the bollards being installed in accordance with Leda's engineered footing details.

PAS68 TESTED PAS 68 certified bollards have been tested using vehicles of various weights travelling at specific speeds. Details of their certification and impact resistance will be found on the specification pages related to these products.

Impact Ratings Table – Engineered Solutions

km/h	kJ	Static Bollards				Retractable Bollards		
		Stainless Steel		Steel		Manual	Semi Automatic	Automatic
		L&R	Fixed	L&R	Fixed	[Lift Handle]	[Gas Strut]	
80	630				*p96* SP1010 SP1020 *p89* IBR250FB68A IBR250FB68B IBR200FB68A IBR200FB68B *p84* IBS250FB *p82* IRB300F C IRB300F B IRB200F C IRB200F B			*p96* SP1040 *p93* SPTT
70						*p95* SP430		*p95* SP440
60			*p95* SP410 SP420 *p19* SSP300F C SSP300F B SSP200F C					*p94* SP100
50	310			*p84* HIG200R C HIG200R B				*p106* ARB200 C SARB200 C
40		*p87* IBR200RSC IBR150RSC SSP150RSC *p18* SSP150R C SSP150R B	*p87* IBR200FSC IBR150FSC SSP150FSC *p19* SSP300F A SSP200F B SSP200F A *p18* SSP150TC SSP150TB SSP150F C SSP150F B	*p84* HIG150R C *p78* SP150R C *p44* AE150R B	*p85* PR441F B RPR441F B *p84* IBS250BB *p82* IRB150F C IRB150F B *p78* SP150F C *p44* AE150F B		*p105* MRB150GS C SMRB150GS C	*p106* ARB200 B SARB200 B ARB200 A SARB200 A ARB150 C SARB150 C
30	100							
20			*p18* SSP150F A SSP150T A SSB150F A SSB150BAWW		*p85* PR441F A RPR441F A	*p104* MRB150 B SMRB150 B	*p105* MRB150GS B SMRB150GS B	*p106* ARB150 B SARB150 B ARB150 A SARB150 A
		p87 SSP125RSC	*p87* SSP125FSC	*p84* HIG150R B	*p44* AE150F A	MRB150 A SMRB150 A	*p105* MRB150GS A SMRB150GS A	
10		*p18* SSP150R A *p17* SSP125R A	*p17* SSP125F A SSP100F A	*p44* AE150R A *p79* XP90R XP90RGG	*p79* XP90F XP90FGG	SMRB90 C		
		p16 SSP80R C SSP80R B SSP80R A SSP80R AS	*p16* SSP80F C SSP80F B SSP80F A SSB80F A	*p78* SP150R A SP90R	*p78* SP150F A SP90F	MRB90 B SMRB90 B MRB90 A SMRB90 A	*Slimline models only referenced, Regal equivalents refer p20-22*	*Slimline models only referenced, Regal equivalents refer p20-22*
0	0							

Disclaimer: The above impact ratings are based on LPS 1246 : Draft 1m 24/03/03. Leda Security Products Pty Ltd makes no claims as to the validity of this wholly independent testing. For specific impact resistance related to any bollard or site, Leda's offices should be contacted to evaluate engineering requirements. Leda is constantly working towards further validating and testing its products for accurate impact ratings. The above impact ratings are therefore subject to change as further engineering investigations are being made constantly. Please contact Leda offices for further advice. Copyright © Leda Security Products Pty Ltd. Securapost ® is a trademark owned by Leda Security Products Pty Ltd. All rights reserved. No part of this work may be reproduced or utilised in any form or by any means, electronic or mechanical, including photocopying, recording or in any information storage and retrieval system, without the prior permission of Leda Security Products Pty Ltd.

Products

The security bollard range provides a multitude of designs and systems catering for the straightforward protection of shopfronts and pedestrian plazas through to high security anti-terrorist applications for critical sites and buildings.

Leda's engineers have been at the forefront of product technologies through ongoing research and development and vehicle impact testing. Leda has also been working with other high security bollard manufacturers and is the Australian distributor for ATG Access (UK and the USA) with access to additional PAS 68 and ASTM certified bollards.

Features

- Impact tested and rated
- High impact and anti-cutting models
- Provide protection from ram raids to vehicular-borne terrorist attacks
- Available in –
  Locking &
  Removable
  Fixed Insitu
  Retractable

Applications

- Shopping centres
- ATM protection
- Commercial and industrial projects
- Public areas and squares
- High risk sites
- Public utilities
- Airports and military bases
- Embassies and government buildings

Sentinel

Super XP

ATM Protection

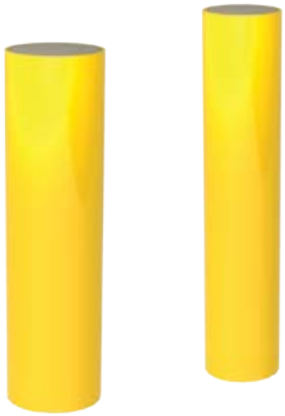

PAS68 Static IBR

Barrier Infill

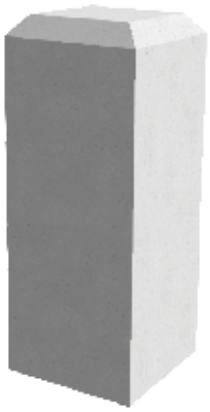

Russell Square

Russell Round

IRB Series
(Concrete filled)

PAS68
Shallow Mount Technology

PAS68 Telescopic

PAS68 Retractable

For security reasons, high security and anti-terrorist certified bollards are not fully detailed. For further information on PAS 68 and ASTM certified bollards and applications, please contact your nearest Leda sales office where your enquiry will be dealt with by an appropriately qualified consultant.

Traditional Security Bollards

The Securapost branding has been the most widely recognised security bollard with over 200,000 successful installations as testament to the level of security they provide.

Protect

- Glass frontages, shop doors, retail outlets
- ATMs from ram raids
- Buildings and structures from vehicular damage

Secure

- Gateways and vehicular entrances
- Roller doors in factories and warehouses
- Property perimeters – with visual deterrents

Prevent

- Disruption caused by break-ins
- Vehicle theft
- Obstruction to driveways and emergency exits
- Unauthorised parking

Define

- Access ways
- Pathways and cycleways
- Areas – vehicle or pedestrian paths

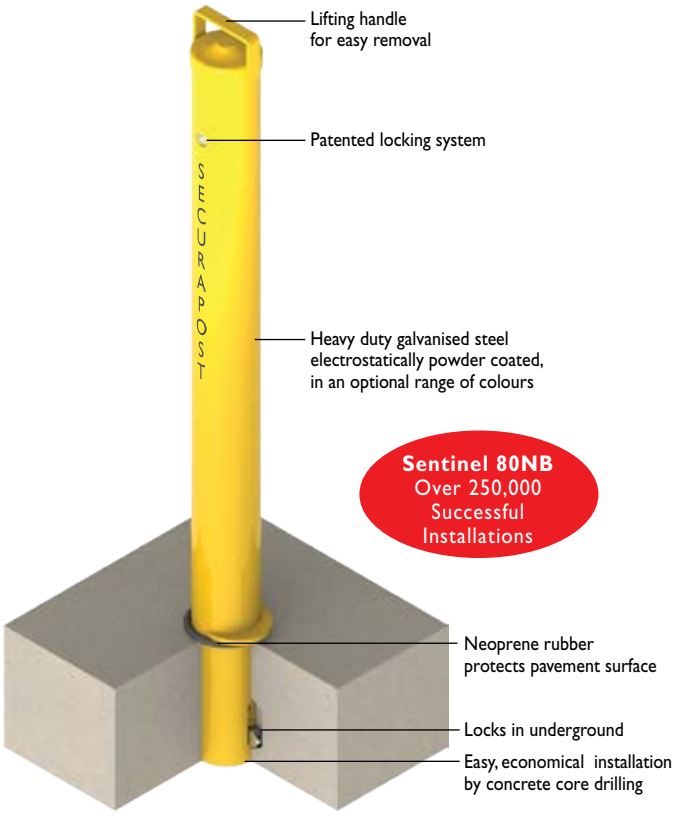

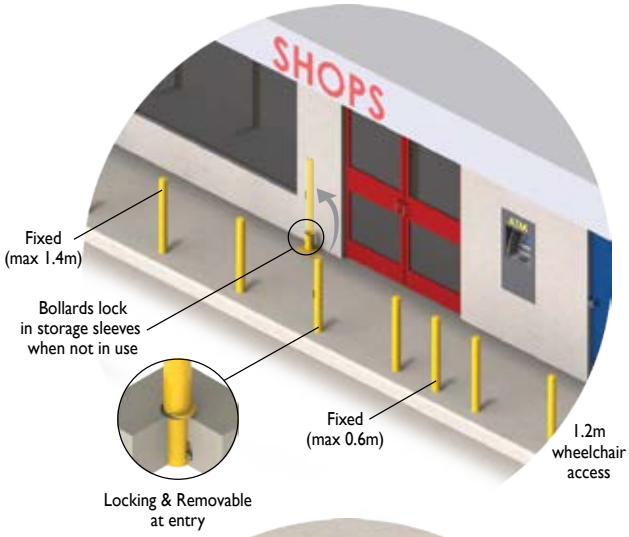

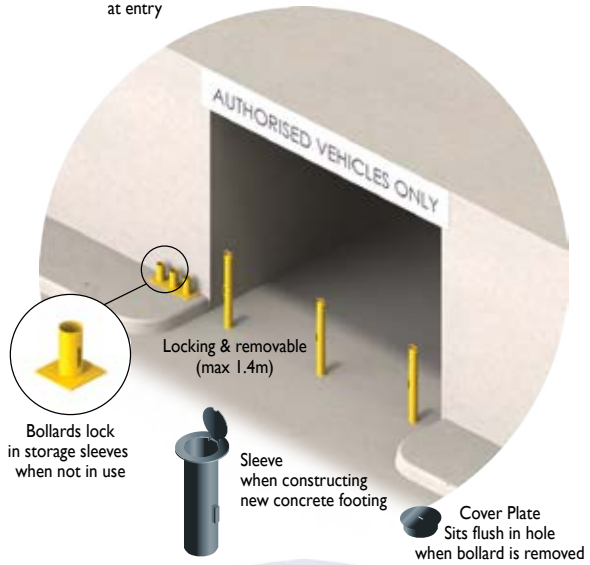

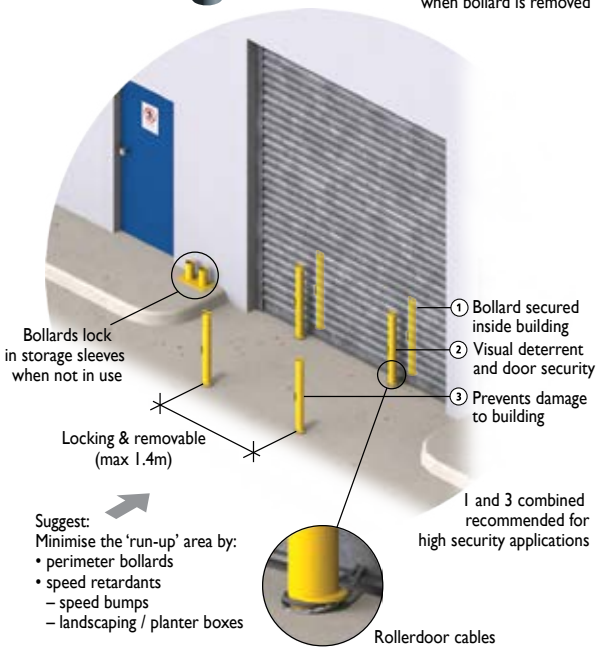

Ram raiding has become the most common method of illegal intrusion into retail and industrial properties.

Technical 'Know-How'

Leda security bollards have been designed and engineered based on intensive market research in conjunction with:

- Law enforcement agencies
- Security companies
- Insurance and risk management experts.

Leda has the technical 'know-how' and offers free site audits using trained and experienced staff to advise and recommend the best methods and products to protect your assets.

Installations are carried out by Leda's professional team and where required, project managed by Leda engineers. Leda offers an unconditional guarantee of replacement should a bollard's security ever be breached. Service technicians are available to supply same-day service and replacement bollards in the event of accidental damage.

Ram Raiding

Leda security bollards provide the first line of defence in preventing ram raids and illegal enforced entry. In many instances, the visual deterrent is all that is needed – however, when relied upon, Leda bollards are designed to physically stop vehicles from entering or leaving an area or building.

Leda bollards are impact rated, allowing selection of the appropriate bollard for the perceived threat and to meet OH&S concerns.

Security Range > Products > Ram Raid Protection

Sentinel 80NB

Material 80NB (88.9) x 3.0mm medium duty galvanised pipe
80NB (88.9) x 5.9mm extra heavy duty galvanised pipe
Finish Electrostatically powder coated in black or industrial yellow.
Optional range of colours available on request.

Locking & Removable
SP90RWW
Lightweight (12kg)

Locking & Removable
SP90R 1
(13.5kg)

Fixed Insitu
SP90F 1

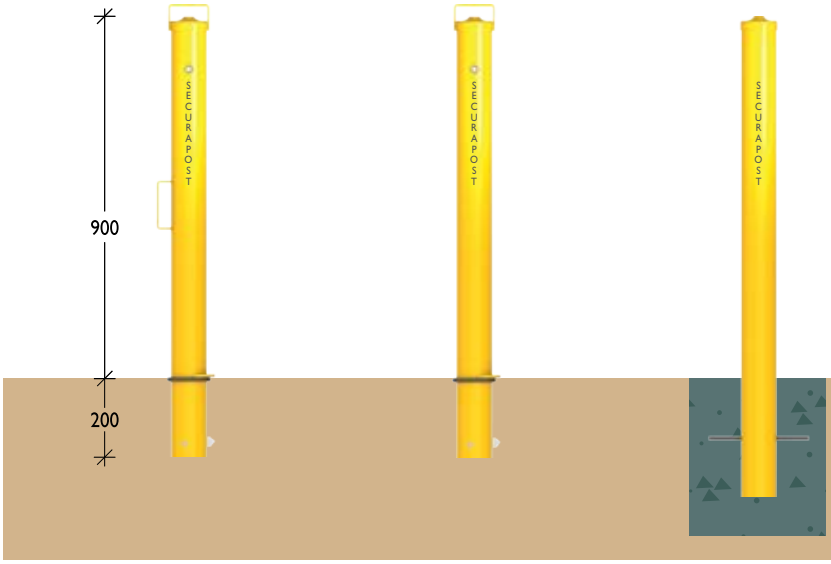

ISF1 Strip Footing, see p68 for details.

Over 250,000 Successful Installations

Sentinel 150NB

Material 150NB (165.1) x 5.4mm HD galvanised or 11.0mm structural pipe
Finish Electrostatically powder coated in black or industrial yellow.
Optional range of colours available on request.

Locking & Removable
SP150R A 5.4 1
SP150R C11.0 2

Fixed Insitu
SP150F A 5.4 1
SP150F C 11.0 2

Double lock option. Ideal where two parties require access without compromising security. Refer *Accessories* section.

Lifting Trolley available for easy removal of heavier L&R bollards. Refer *Accessories* section.

ISF1 Strip Footing, see p68 for details.

Super XP

Material 80NB (88.9) x 10.4mm extra heavy duty galvanised pipe
Finish Electrostatically powder coated in black or industrial yellow. Optional range of colours available on request.

Locking & Removable
XP90R I
(19.5kg)

Locking & Removable
XP90RGG I

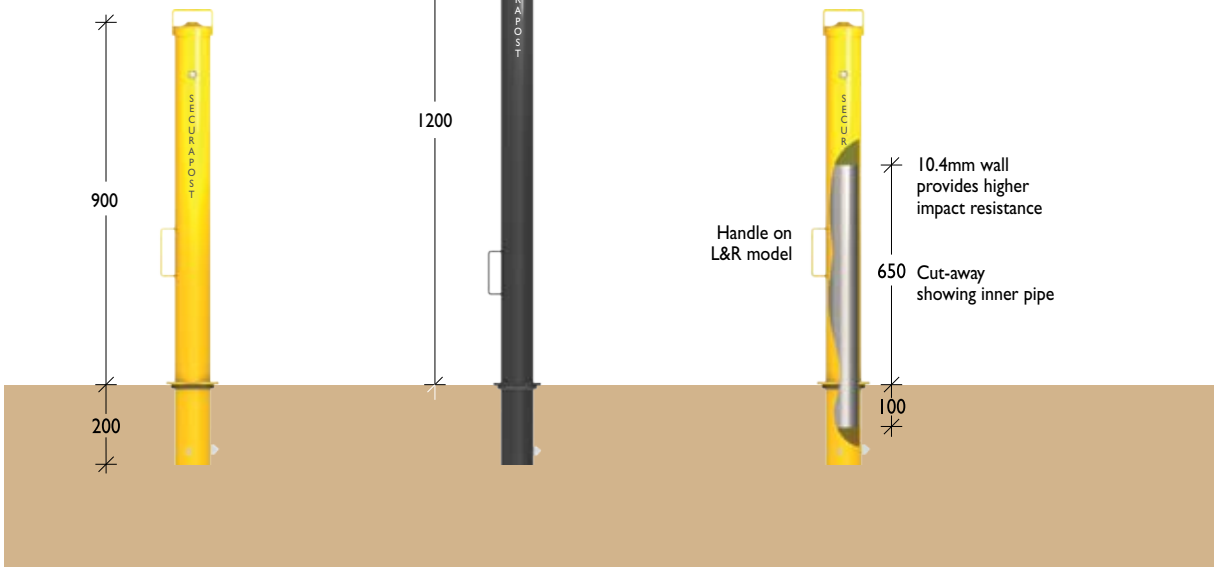

Fixed Insitu
XP90F I

Fixed Insitu
XP90FGG I

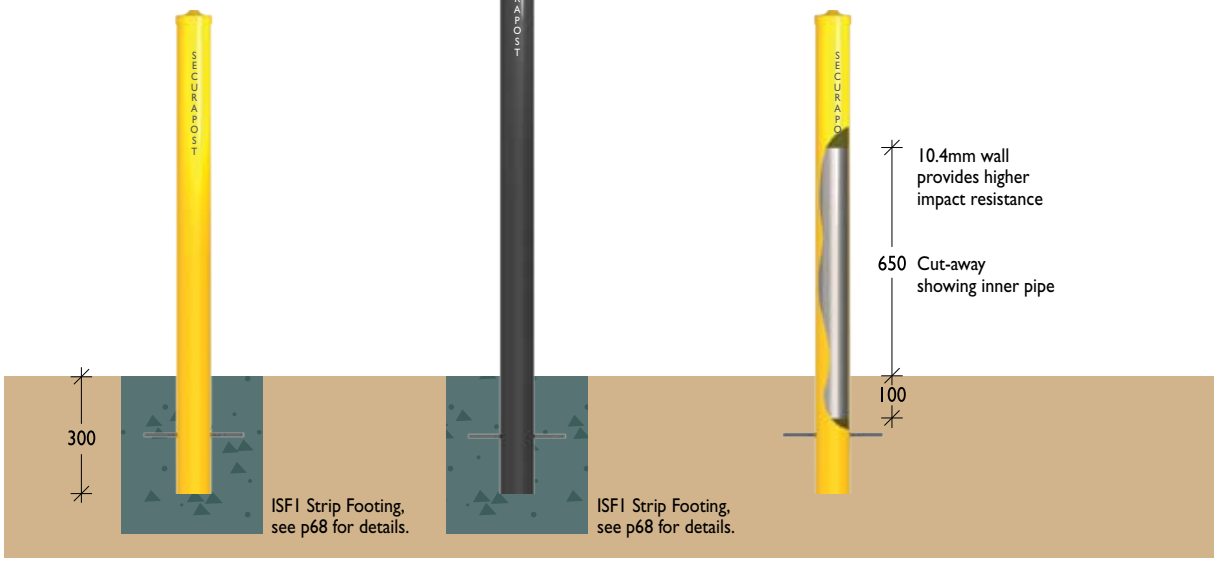

Prior to the design and testing of these new ATM security devices, Leda consulted with ATM manufacturers and service providers, major banks, retail outlets and insurance companies, to determine the products and devices needed to deter and slow down ATM attacks.

The security products developed as a result of our research and development program are not directed at one specific application and should never be used in isolation. Instead, they add to a range of options that can be used to collectively provide greater ATM security.

The objective for all ATM owners and the property managers is to make it more difficult to attack so that:

- Thieves look elsewhere for an easier target.
- Thieves face 'layered' security away from the target.
- Time required to steal the ATM is extended, increasing detection with collateral damage eliminated or reduced.

ATMs fall into 2 major categories:

- Through-the-wall ATMs (larger ATMs common with banks and credit unions).
- Lobby ATMs (fastest growing segment of the ATM industry – with applications from hotels and malls, to service stations).

ATM Barriers

- *Visual deterrent*
- *Disrupts lassoing or lifting*
- *Moderate impact resistance*

ATM Bollards

- *Visual deterrent*
- *High impact resistance*
- *Highly resistant against cutting tools, oxyacetylene torch and force attacks, or a combination of all three*

Fixed insitu security bollards max 0.6m centres

Wheelchair access 1.2m

ATM Protection

Material Heavy duty galvanised pipe / galvanised RHS
Finish Electrostatically powder coated in a range of colours

16mm anchors

Barrier
ATM65B
65NB (76.1) x 4.5mm
ATM80B
80NB (88.9) x 5.9mm

Optional fixed insitu

16mm anchors

Barrier
ATM100B
100 x 100x 6.0mm RHS

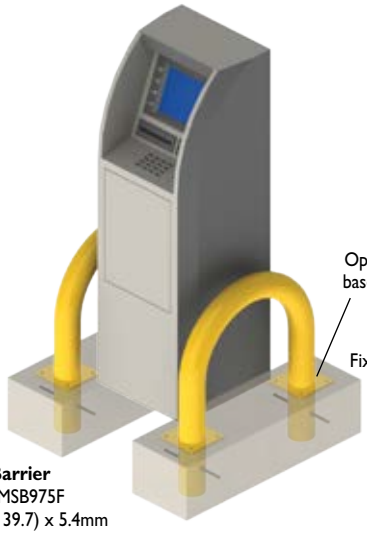

Optional baseplate

Fixed insitu

Barrier
ATMSB975F
125NB (139.7) x 5.4mm

XP90F Fixed Bollards

XP90 Bollards
ATM804R
80NB (88.9) x 5.9mm
65NB (76.1) x 4.5mm insert

XP90R L&R Bollards

ATM Anchor
ATMAL328
12mm Plate Steel
Powder coat Black

Supplied with 2.0MT x 10mm galvanised steel chain

'D' Bolt
6 x 12 x 100mm masonry anchors

Security Range > Products > High Security

IRB Series

Material 150NB (168.3) x 7.11 / 11.0mm extra heavy duty pipe
200NB (219.1) x 8.2 / 12.5mm extra heavy duty pipe
300NB (323.9) x 9.5 / 12.7mm extra heavy duty pipe

Finish Electrostatically powder coated in black or industrial yellow. Optional plastic sleeve suit 150NB (range of colours) or stainless steel sleeve suit 150 / 200 / 300NB.

Note. These bollards are designed for concrete infilling on site.
Caps or reinforcement are not included

150NB
IRB150F B 7.11 **2**
IRB150F C 11.0 **2**

200NB
IRB200F B 8.2 **3**
IRB200F C 12.5 **3**

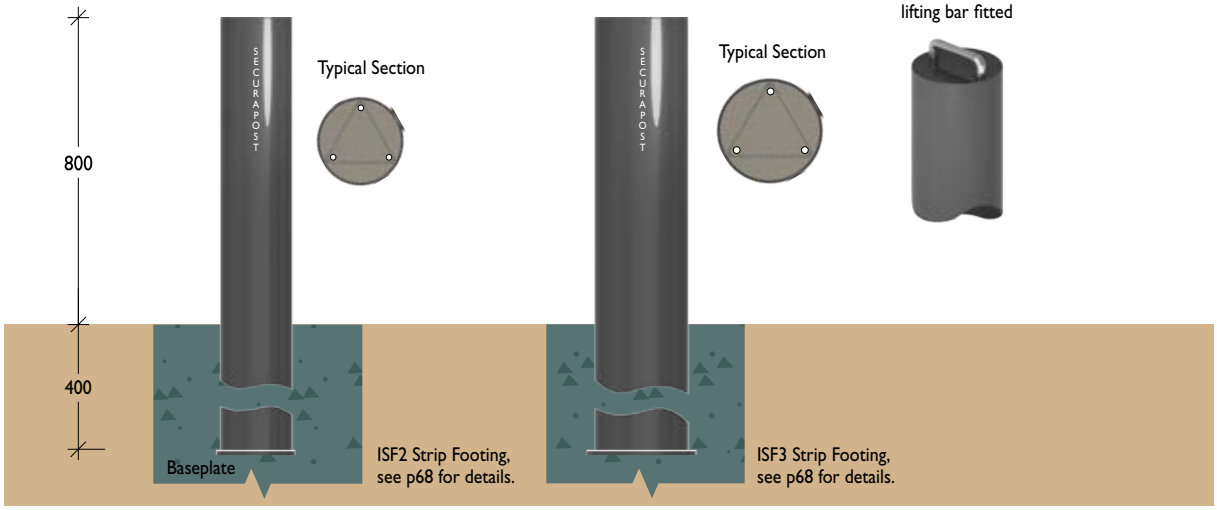

Ø20mm round lifting bar fitted

Note. These bollards are designed for concrete infilling on site.
Caps or reinforcement are not included

300NB
IRB300F B 9.5 **3**
IRB300F C 12.7 **3**

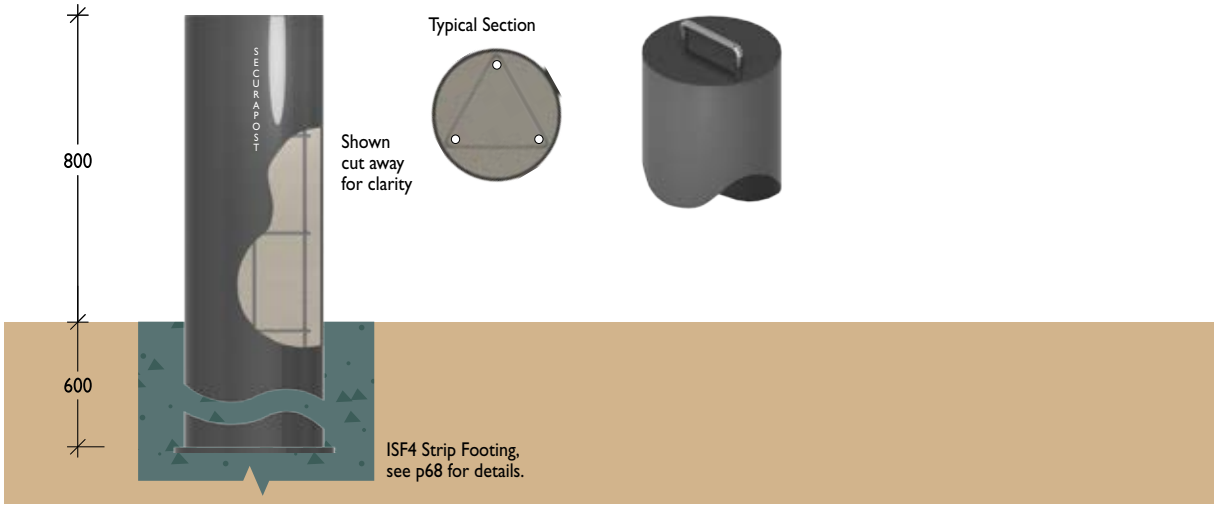

Ø20mm round lifting bar fitted

IRB Series
Polyethylene Sleeves

Material Polyethylene (extra heavy duty steel pipe.)
Finish Polyethylene, choice of colours

Ambassador Profile
Polyethylene Sleeve
PAS150F

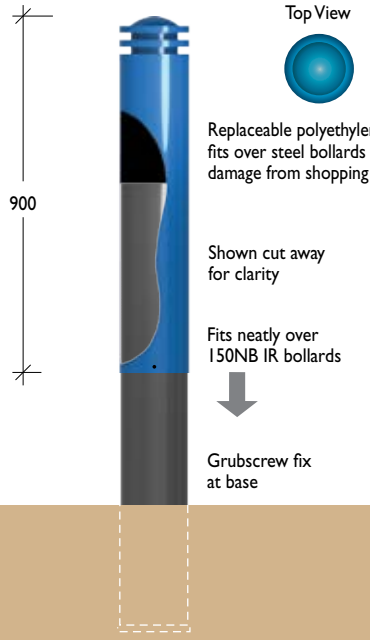

Low Cost Solutions

For use in medium to high security applications providing a cost-effective alternative to using thick-wall stainless steel. or Ambassador profile bollards.
Also ideal for use in high accident prone applications, like supermarkets, where it may be necessary to replace bollards damaged by shopping trolleys.

Can be fitted to new or existing bollard installations.

IRB Series
Stainless Sleeves

Material Stainless steel tube Ø172 (extra heavy duty steel pipe.)
Finish Linished or electro-polished

Can be fitted to new or existing bollard installations.

Slimline Profile
Stainless Steel Sleeve

Typical Top Views

Regal Profile
Stainless Steel Sleeve

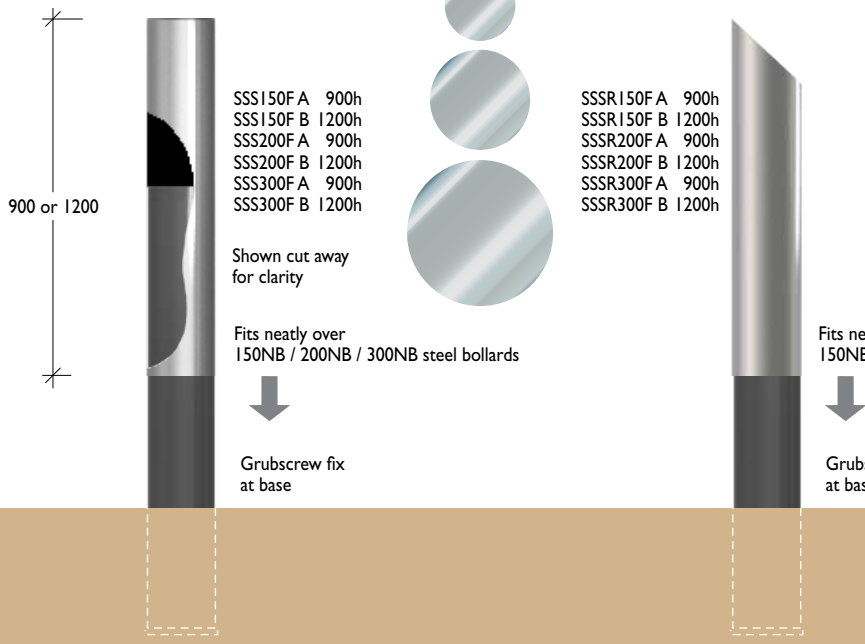

Security Range > Products > High Security

HD Industrial Fixed Insitu

Material 150NB (168.3) x 7.11 x 11.0mm galvanised steel pipe
200NB (219.1) x 8.2 / 12.7mm galvanised steel pipe
250 x 250 x 9.5mm SHS, concrete filled

Finish Electrostatically powder coated in black or industrial yellow.

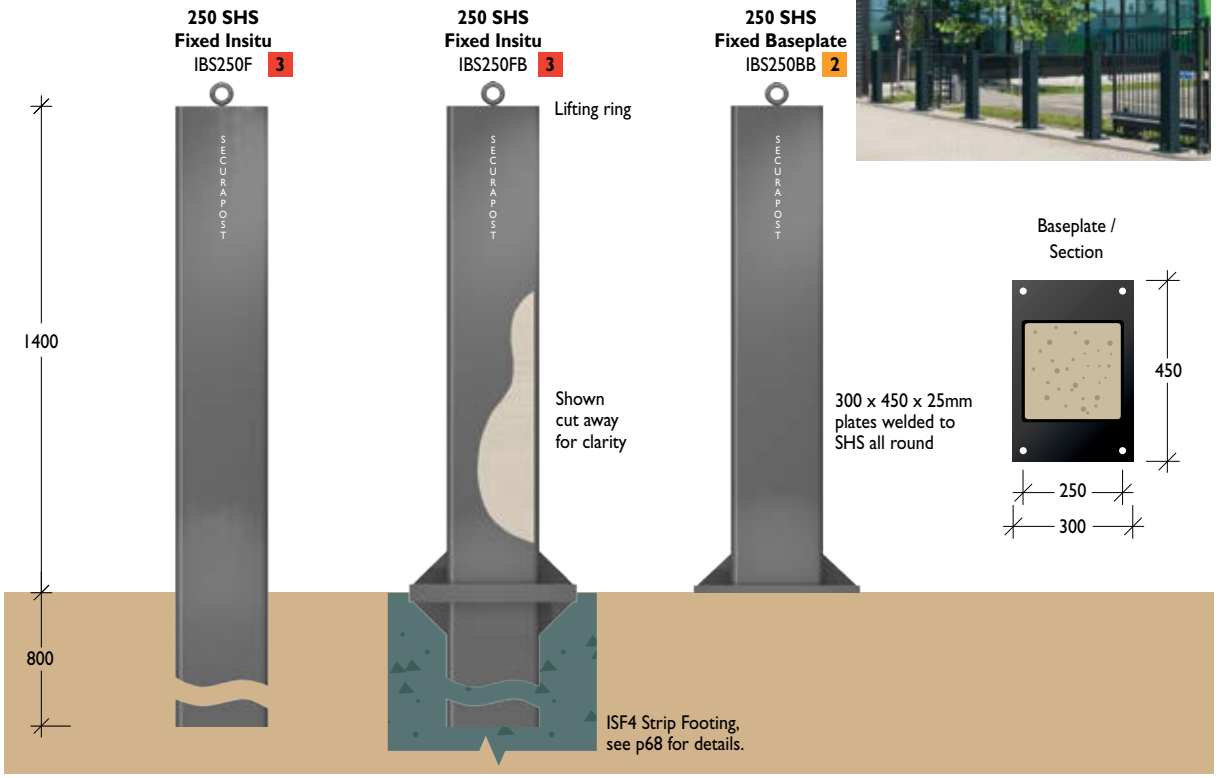

HD Industrial Removable

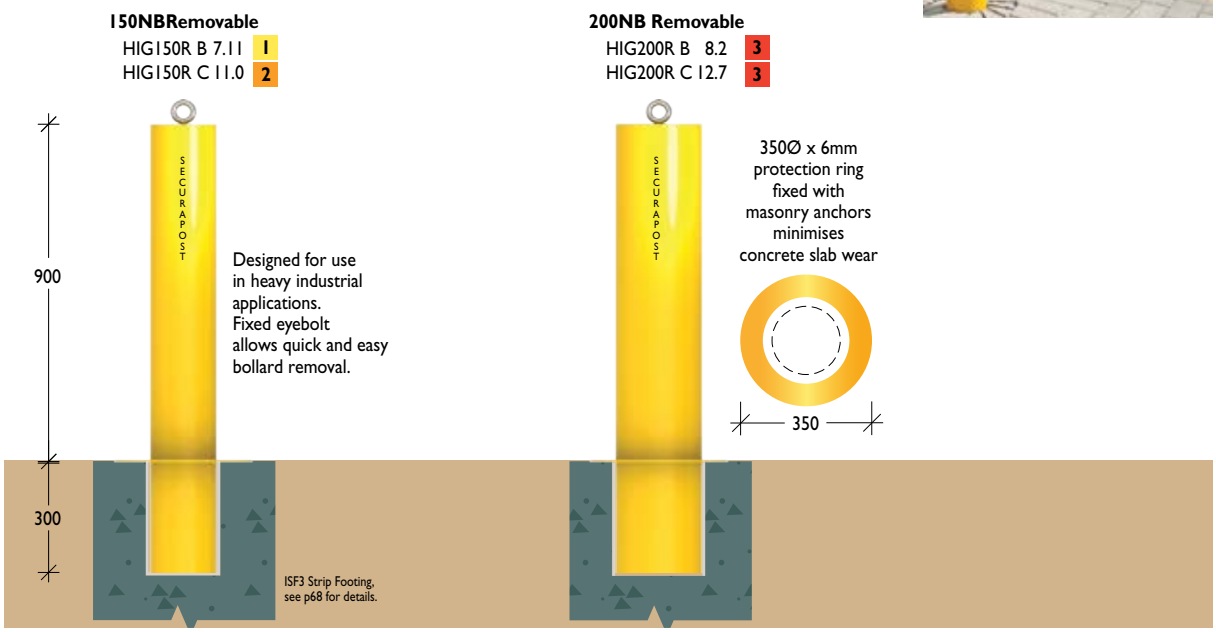

Pre-cast Concrete
Russel Square

Material 30MPa concrete
150NB (168.3) x 7.11 / 11.0mm linepipe
Finish Off-white, lightly sand blasted

Fixed Insitu
150NB Insert
PR441FA 7.11 1
PR441F B 11.0 2

Section

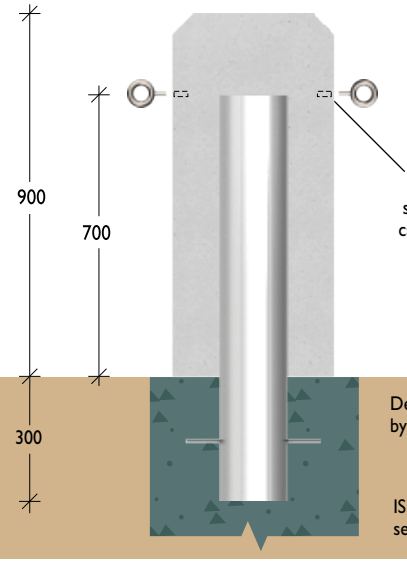

Top View

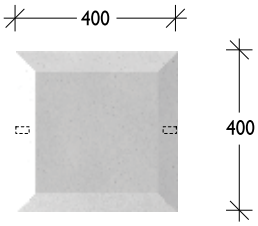

Cruciform reinforcement
and barrier mix infill also available,

Depth of pipe insertion is determined
by impact rating requirements

ISF2 Strip Footings,
see p68 for details.

Pre-cast Concrete
Russel Round

Material 30MPa concrete
150NB (168.3) x 7.11 / 11.0mm linepipe
Finish Off-white, lightly sand blasted

Fixed Insitu
150NB Insert
RPR441FA 7.11 1
RPR441F B 11.0 2

Section / Elevation

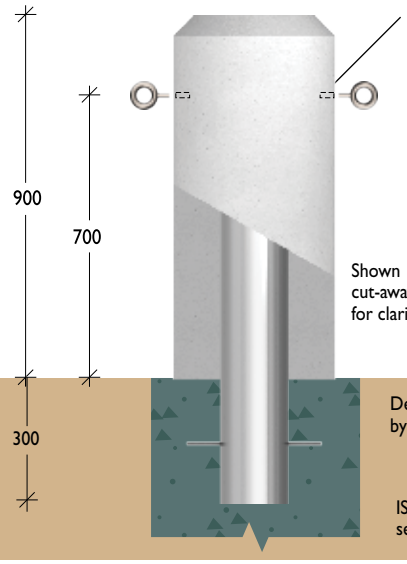

Top View

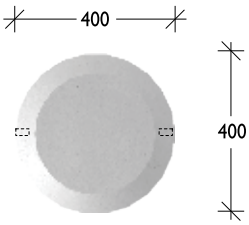

Cruciform reinforcement
and barrier mix infill also available,

Depth of pipe insertion is determined
by impact rating requirements

ISF2 Strip Footing,
see p68 for details.

Barrier Infill Bollards

Leda's Barrier Infill Bollards have been developed to impede and prevent vehicular ram raids as well as attacks on ATMs within retail outlets and shopping centres, while still allowing easy pedestrian access.

These high security bollards are also designed to protect property, avoiding the costly building repairs and disruption that can follow a ram raid attempt.

The bollards were developed in consultation with ATM manufacturers, major banks, shopping centre owners and insurance companies.

They have proved to be the largest physical deterrent in minimising ram raid attacks on ATMs and are often used in other high security applications due to their combination of high impact and anti-cutting characteristics.

During the research and testing program various types of cutting equipment was used to determine the cutting resistance of different bollard infills.

The successful results came to the notice of Australian and British security organisations who conducted further vehicle impact testing at the Transport Research Laboratories outside London.

The bollards were impact-tested at various speeds using 2.5t, 3.5t and 7.5t commercial vehicles, and the impressive results has led to the barrier-infill bollards being approved and certified under PAS 68 (UK).

While the results of these impact tests are confidential, Leda is the only Australian bollard manufacturer with the knowledge to assist in specifying the appropriate high security bollards for your application as well as providing the engineering details for concrete footings needed to absorb the impact energy.

Cutting Resistance

Impact resistance is normally a key issue with the majority of bollard installations, however in security applications, cutting resistance may be equally important. The bollards incorporate internal (cruciform) reinforcement and barrier mix infill that significantly increases the bollard's impact resistance while also providing maximum cutting impediment.

Typical section through the bollard showing the cruciform reinforcement and barrier mix infill

Crash Testing
Impact-tested at various speeds using 2.5t, 3.5t and 7.5t commercial vehicles.

Various types of cutting equipment were used to determine the cutting resistance of different bollard infills.

SSP Barrier Infill
Stainless Steel

Material 125NB (141.3) x 3.4 stainless steel pipe
150NB (165.1) x 5.4 mild steel pipe
150NB (168.3) x 3.4mm stainless steel pipe
Finish Stainless steel. Linished or electro-polished

PAS68 TESTED

150NB
Fixed Insitu
Embedment and footing design critical.
SSP150FP68A
231kJ, 2500kg @ 48km/h
SSP150FP68B
324kJ, 3500kg @ 48km/h
SSP150FP68C
296kJ, 7500kg @ 32km/h

Typical Section

Barrier mix infill is also available on all Leda Slimline and Regal stainless steel bollards.

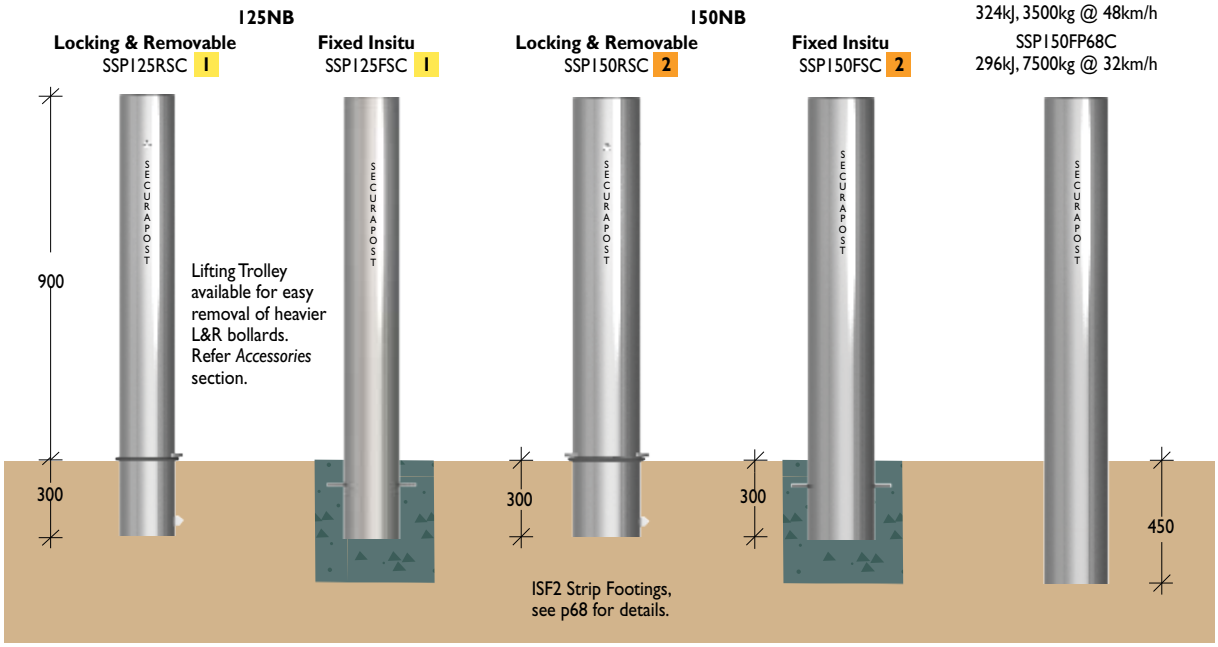

IBR Barrier Infill
Steel / SS Sleeve

Material 150NB (168.3) x 4.8 / 7.11 / 11.0mm extra heavy duty pipe
200NB (219.1) x 4.8 / 8.2 / 12.5mm extra heavy duty pipe
Finish Steel. Electrostatically powder coated in black or industrial yellow.
Stainless steel sleeve to suit

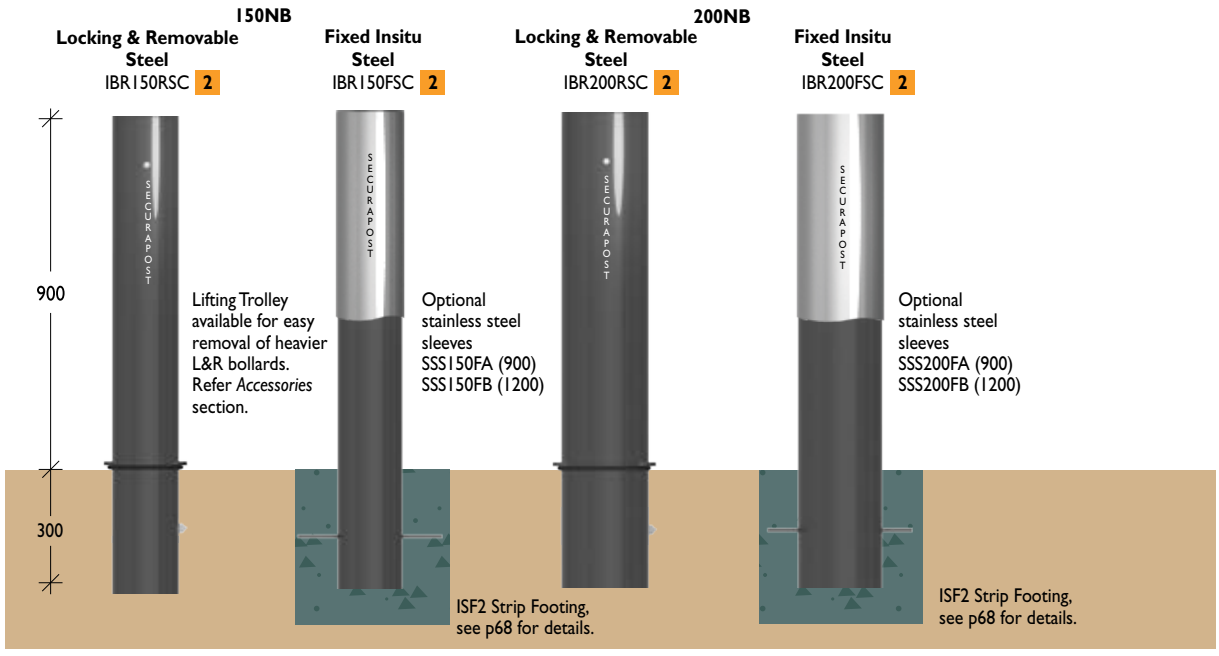

Static Bollards

Leda has a range of PAS 68 Tested and Certified static generic bollards. They are available in two diameters and various wall thicknesses that provide varying levels of impact resistance.

All tests were conducted at TRL Test Agency in Wokingham, Berkshire UK.

Model No	Size Ø mm	Wall mm	Test No	Weight kg	Speed km/h
IBR200FB68A	219	10	B4125	7500	48
IBR200FB68B	219	16	B3945	7500	64
IBR250FB68A	273	10	B4240	7500	64
IBR250FB68B	273	16	B4310	7500	90

Generic bollard footings drawings specific to the PAS 68 rated bollards will be supplied after contracts have been signed. Certification for site specific installations can be arranged, at additional cost, by Leda's independent UK-based consulting engineers.

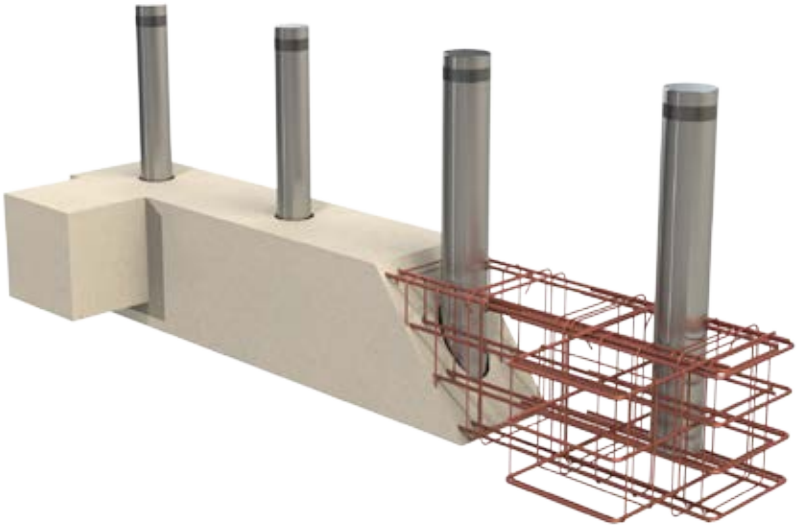

PAS 68 Certification provides the assurance that the bollards have been impact tested to the performance specifications of their certificate.

Static IBR 200

Material Ø219 x 10mm / 16mm seamless steel pipe

Finish Electrostatically powder coated in black or industrial yellow.

PAS68 TESTED

Test B4310 COMMERCIAL IN CONFIDENCE TRL PROPRIETARY INFORMATION Test date: 4 June 2010

Test procedure:
PAS 68:2010 Test Type 7500/80/90

Ø273x16mm wall generic tube: IBR250FP68B

Customer:

Supplier of 273/16 IBR250FP68B

Test Date:
4 June 2010

Test Number:
B4310

Authors:
Tim Pearce & Dean Bucton

Report Issue Date:
13 March 2013

For questions relating to this test please contact the Author at TRL

© Copyright TRL Limited, March 13. All rights reserved.

Approvals

Author Tim Pearce & Dean Buxton

Technical reviewer Gavin Williams

CPR777 v13 2 of 16 Customer: CPNI

IBR200FB68A 3
Ø219 x 10mm

IBR200FB68B 3
Ø219 x 16mm

IBR200FB68RA
Ø219 x 10mm

IBR200FB68RB
Ø219 x 16mm

Stainless Steel Sleeves
(Sleeve only)

SSS200FB

SSSR200FB

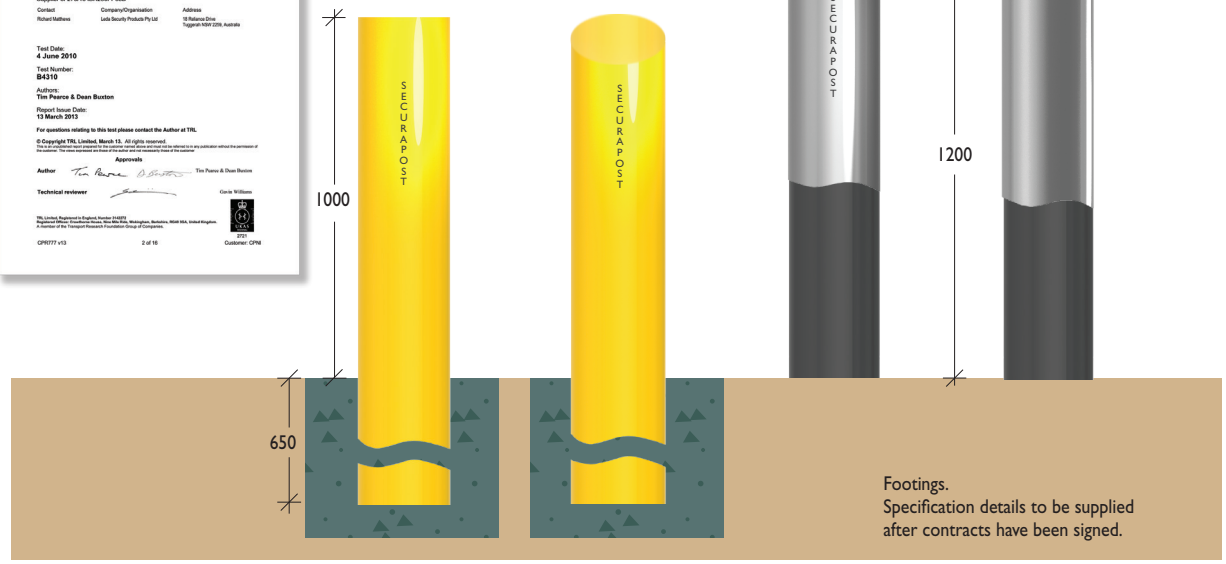

Footings.
Specification details to be supplied after contracts have been signed.

Static IBR 250

Material Ø273 x 10mm / 16mm seamless steel pipe

Finish Electrostatically powder coated in black or industrial yellow.

PAS68 TESTED

IBR250FB68A 3
Ø273 x 10mm

IBR250FB68B 3
Ø273 x 16mm

IBR250FB68RA
Ø273 x 10mm

IBR250FB68RB
Ø273 x 16mm

Stainless Steel Sleeves
(Sleeve only)

SSS250FB

SSSR250FB

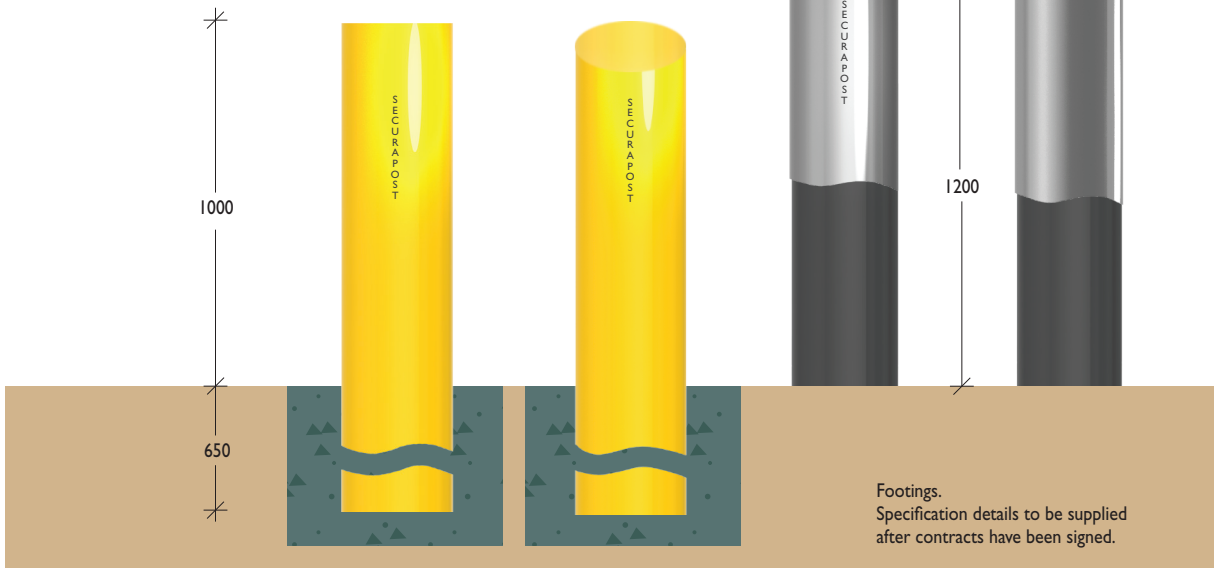

Footings.
Specification details to be supplied after contracts have been signed.

ATG Access

Leda is the Australian Distributor for ATG Access, a UK company recognised as the indisputable industry leader in the design and manufacture of high security bollards.

This comprehensive range of PAS 68 certified products and systems provide security consultants, government agencies and industry specifiers with the assurance that the products selected will meet their specification and/or security threat protection.

ATG were the pioneers of shallow mount technology and their bollard systems have been successfully installed in hundreds of high security projects around the world.

When coupled with Leda's acknowledged project management and installation experience, a successful project is guaranteed.

Telescopic Bollards

PAS68 TESTED

Fixed Bollards

Retractable Bollards

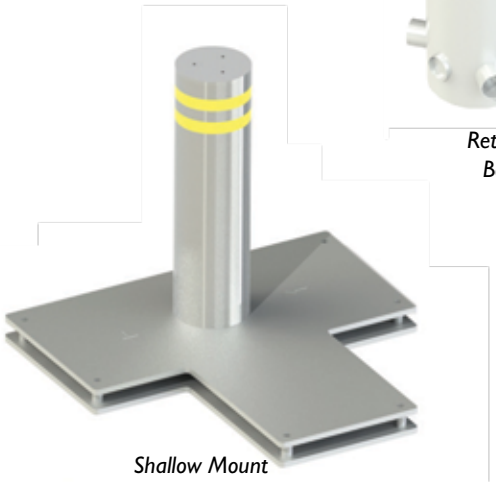

Shallow Mount Technology

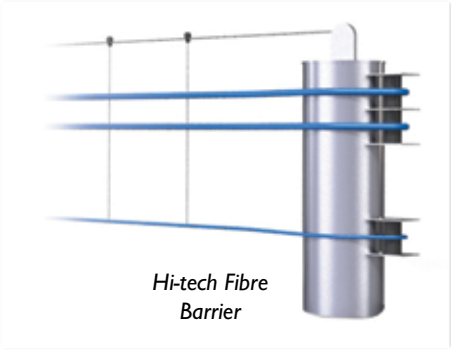

Hi-tech Fibre Barrier

ATG Shallow Mount Technology

ATG Access prides itself on innovative engineering and has successfully designed and launched a shallow mount system for their SP400 and SP1000 bollards. These bollards not only offer PAS 68 rated protection, they also provides customers with a 'green solution' to their perimeter security needs.

Originally designed to combat the problematic fitting of traditional bollards which require deep footings and which can expose a range of services, prohibiting installation.

Greener solution

During installation disruption of habitats and tree roots is also kept to a minimum, and with less machinery required on site, pollution and noise is also reduced. Fundamentally the 'greener solution' uses a smaller amount of concrete – less than 25% of the concrete that's used in a traditional footing, and greatly reducing CO2 emissions.

Working with a variety of trade partners like Leda Security, ATG Access's shallow mount bollards have been frequently chosen for prestigious projects like banks, airport terminals, railway stations, government buildings, embassies and sports stadiums, which have identified the benefit of selecting this technology.

Impact Ratings

The shallow mount system has been tested to stop vehicles at various speeds.

Underground services that prohibit the installation of traditional deep footings.

Shallow mount footings require minimal excavation and concrete.

Benefits

- Comparatively low quantities of concrete
- Installation period substantially lower (between 1-2 hours per bollard)
- Less on-site duration – reduced preliminaries
- Reduction in time needed for setting out
- No formwork required
- No need for reinforcing bars in concrete sub-base
- Reduction in service disruption and ground works.

Shallow Mount
Fixed

Material Ø209 or Ø305 extra heavy duty mild steel pipe sections
Finish Hot dipped galvanised

PAS68 TESTED

Plan ATG's shallow mount caters for two different bollards:
SP420 Ø209mm / 217mm sleeved
SP1020 Ø305mm / 323mm sleeved

These shallow mount bollards can stop vehicles travelling at 48.64 or 80 km/h.

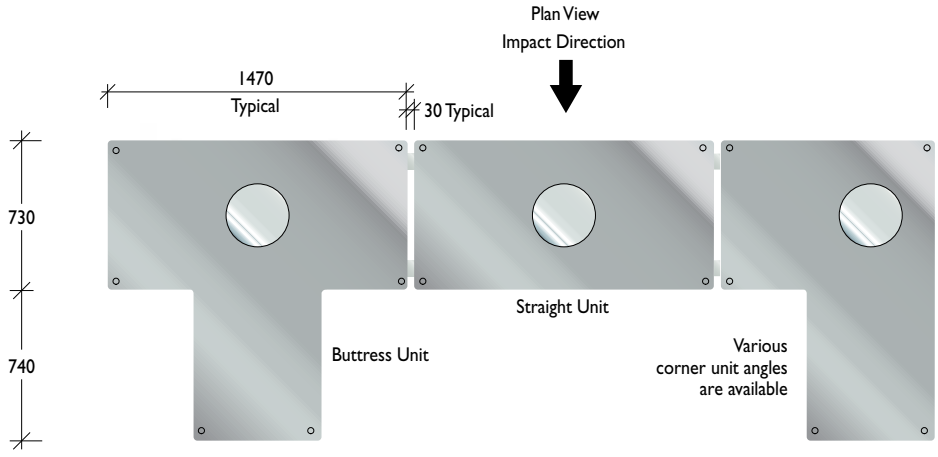

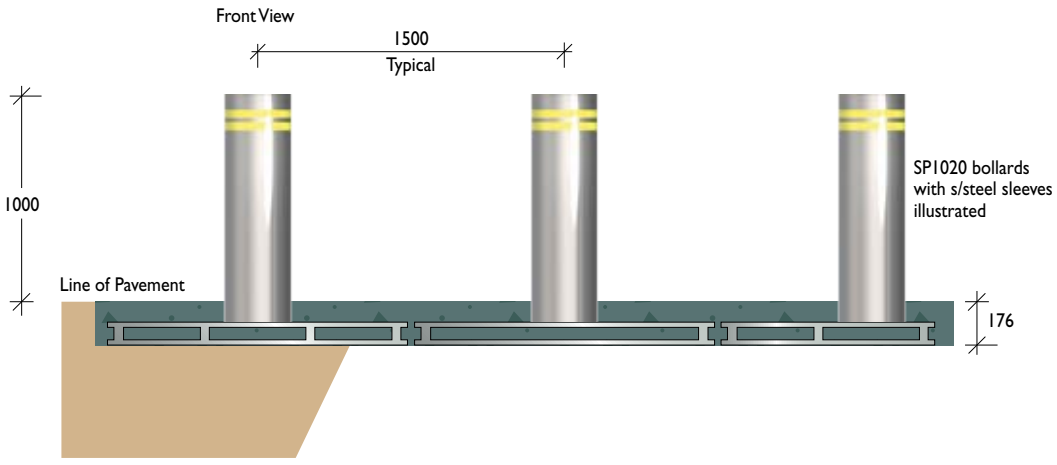

SPTT
Telescopic

Material Top Ø209 / Bottom Ø280 steel
Finish Black sheradised

PAS68 TESTED

SPTT 3
V7500 (N2) 64/90 : 0.5/6.1

- Double retractable
- Shallow mount
- Automatic

The ATG Telescopic bollard has a unique double action retractable design which ensures smooth operation and acts as a depth saving feature. It has been successfully impact tested in accordance with BSI PAS 68:2010, arresting a 7,500kg truck at 64km/h and with less than 1m penetration.

This latest innovation in technology allows the use of automatic bollards for high security solutions to be installed in areas where underground services or lack of space for excavation may cause a problem.

The Shallow TT fits into the existing range of high security systems to ensure that there is a solution to meet any of a customer's requirements. The bollard stands one metre tall yet only requires 900mm footing, significantly less than usual high security retractable bollards.

It is the strongest reduced-depth automatic bollard on the market.

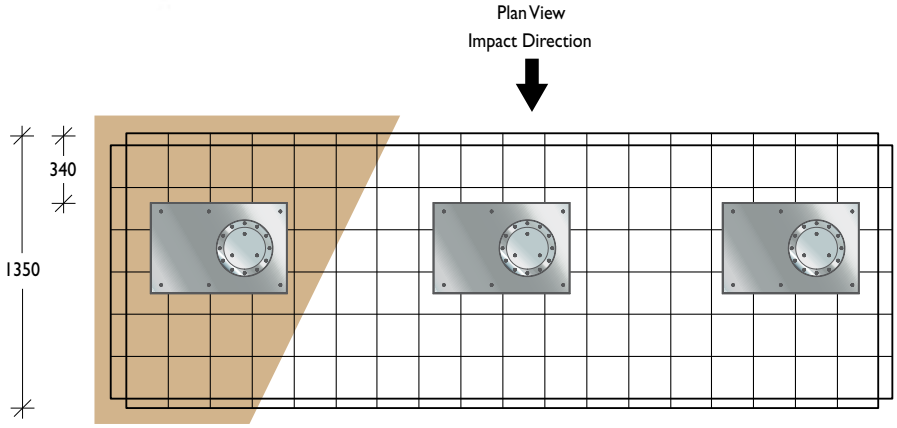

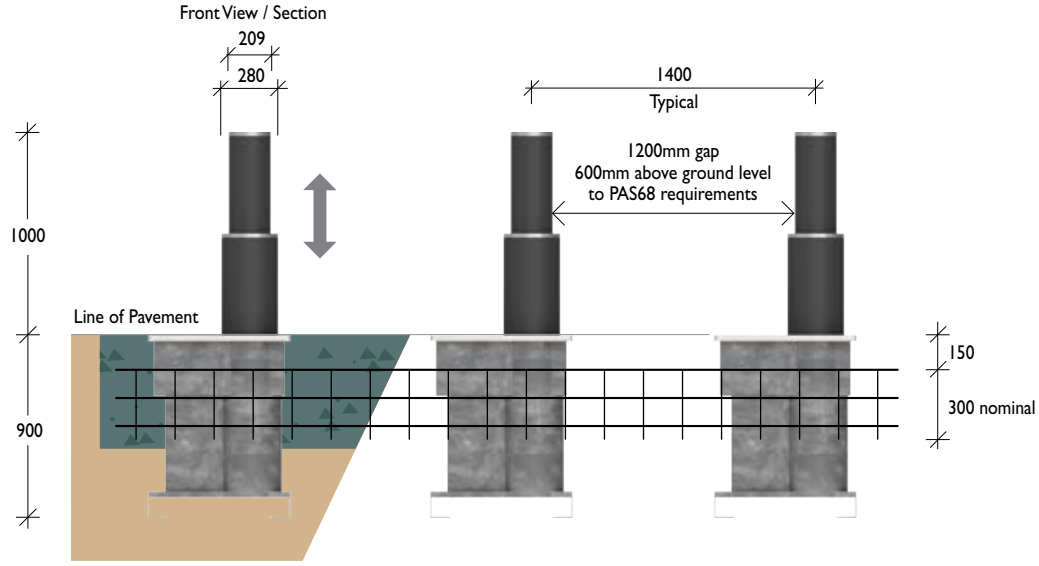

SP100
Retractable

Material Ø127 mild steel pipe
Ø141 stainless steel pipe
Finish Steel. Hot dipped galvanised or a range of RAL colours
Stainless Steel. Linished

PAS68 TESTED

Security Rating
V3500 (N1) 48/90 : 2.8/0.0

The most economical high security retractable bollard with PAS68 Certification. It is ideally suited where budget is a primary restraint and where there are minimum traffic movements.

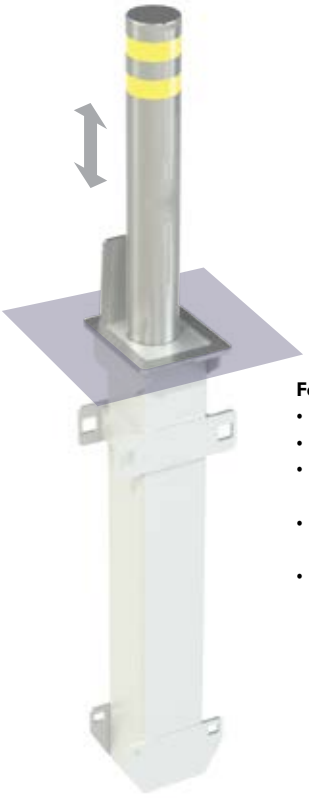

Features

- Semi-automatic operation
- No external power required
- Ideal for miniumum traffic areas and where budget is the primary restraint
- Stand alone installation, does not require strip fottings
- Quick and economical to instal.

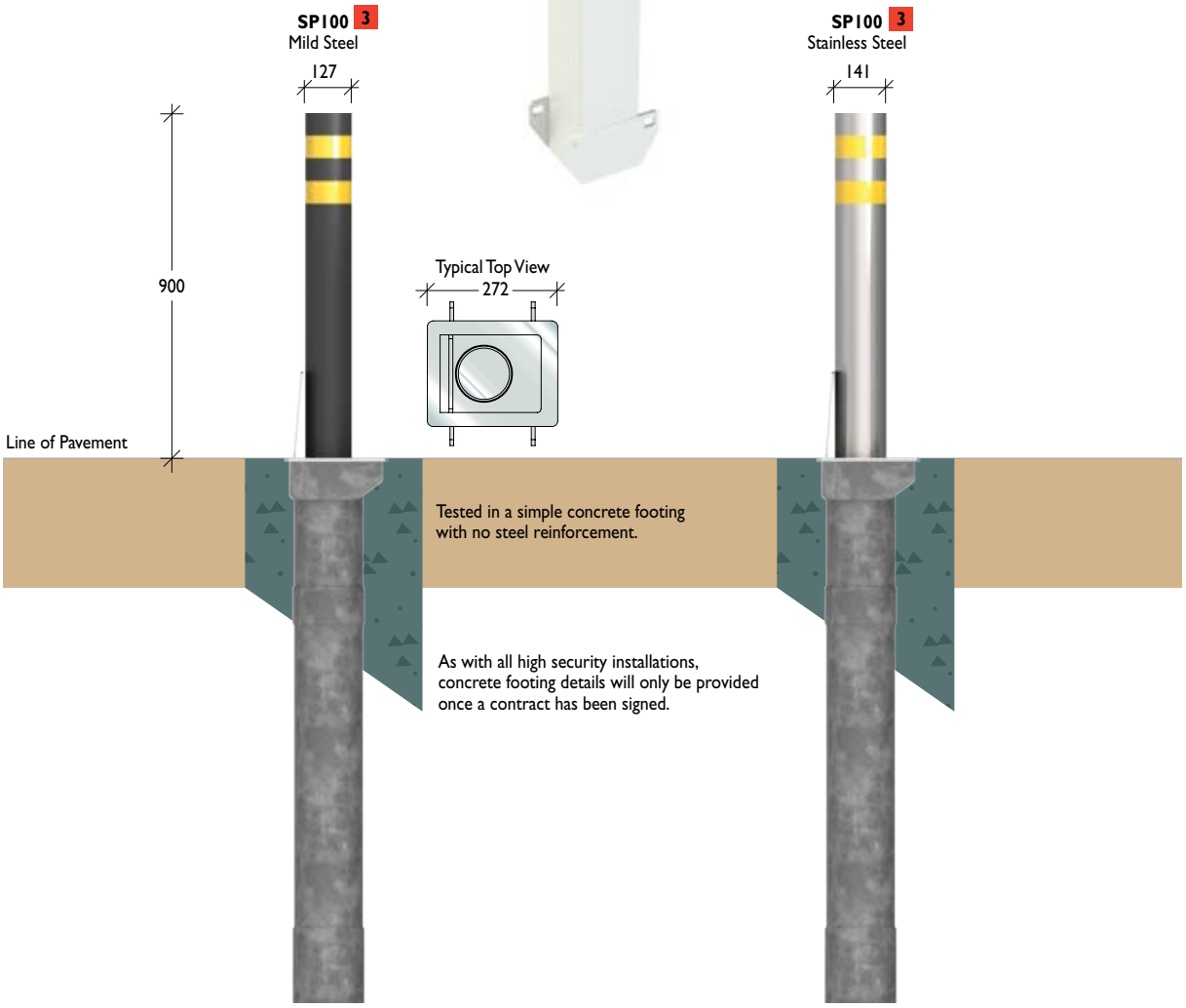

SP400
Fixed & Retractable

Material Ø203 extra heavy duty mild steel pipe
Finish Hot dipped galvanised or a range of RAL colours
Optional stainless steel sleeve

PAS68 TESTED

Security Rating
V7500 (N2) 48/90 : 0.0/0.0
V7500 (N2) 64/90 : 2.3/2.7

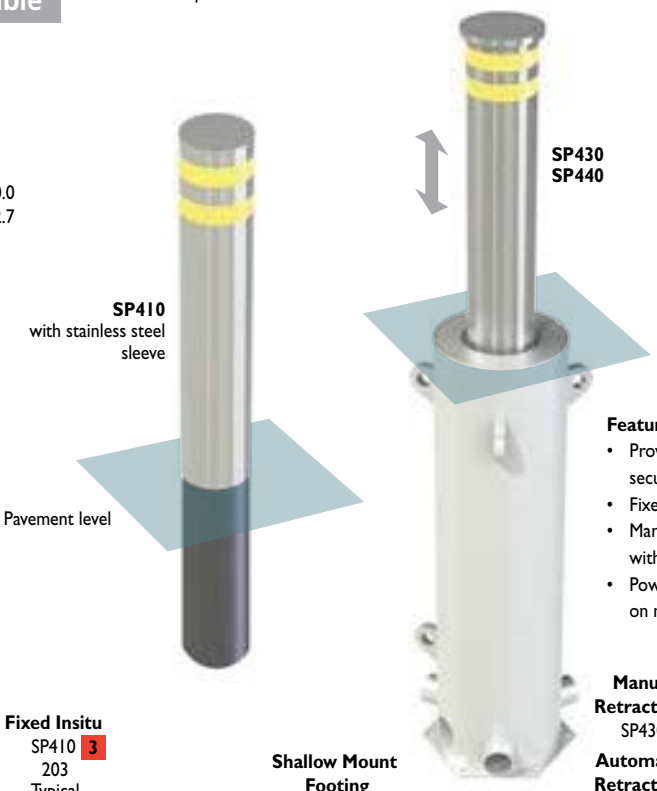

Features
- Provides a vast range of security requirements
- Fixed insitu or shallow mount
- Manual and automatic retractable with internal pneumatic assistance
- Power drill assisted on manual retractable

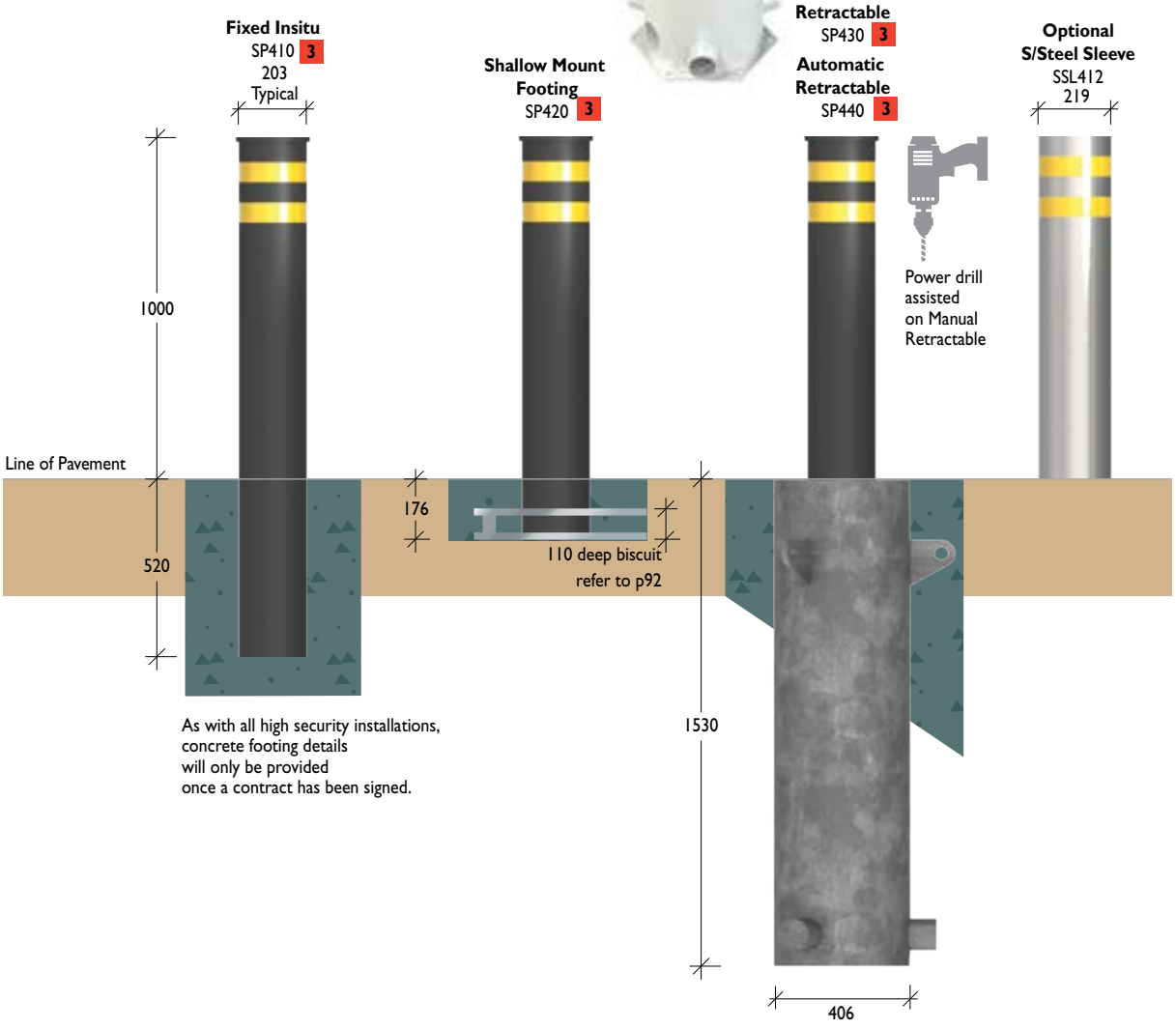

As with all high security installations, concrete footing details will only be provided once a contract has been signed.

SP1000
Fixed & Retractable

Material Ø305 extra heavy duty mild steel pipe
Finish Hot dipped galvanised or a range of RAL colours
Optional stainless steel sleeve

PAS68 TESTED

Security Rating
V7500 (N2) 80/90 : 3.0/10.0

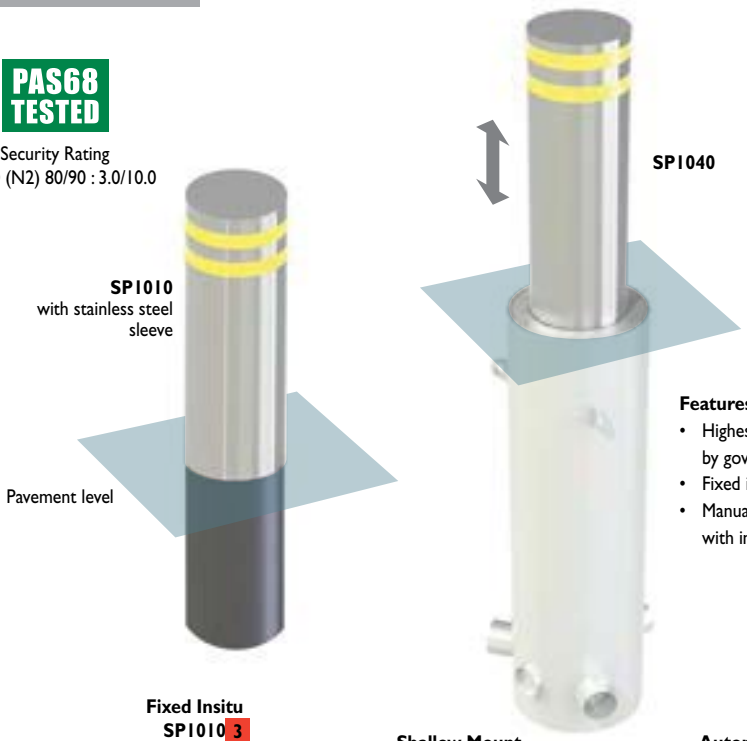

Features

- Highest security level required by government departments
- Fixed insitu or shallow mount
- Manual and automatic retractable with internal pneumatic assistance

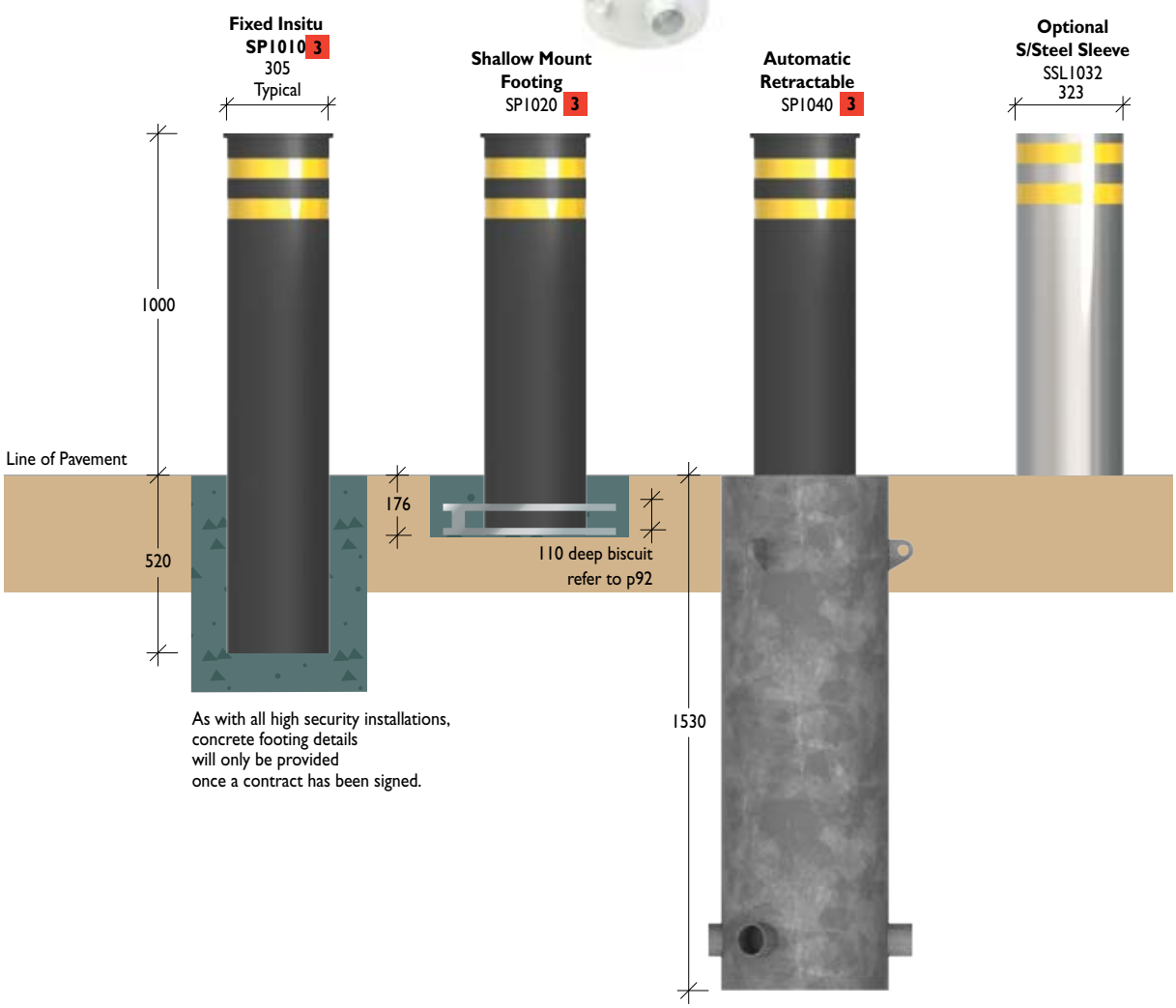

As with all high security installations, concrete footing details will only be provided once a contract has been signed.

ERB
Electro Mechanical

Material Ø254 x 10/11.2mm wall Steel or Stainless steel
Finish Powder coated or Electopolished

Note wall mounted control panels

Saves space
Plug and play

IWA14-1 TESTED

Vehicle impact tested to 2500kg at 64km/h (411KJ).
Simple electromechanical operation.

- Lights included
- 240V powered IP68 rated
- Motor supply 24Vdc
- 10 seconds Rise/Lower
- Upto 600 cycles per day
- Additional steel cage required for impact rated models
- Fail safe
- Obstacle detection
- Cables with IP69 connection

Options:
Solar power
Fail secure with UPS

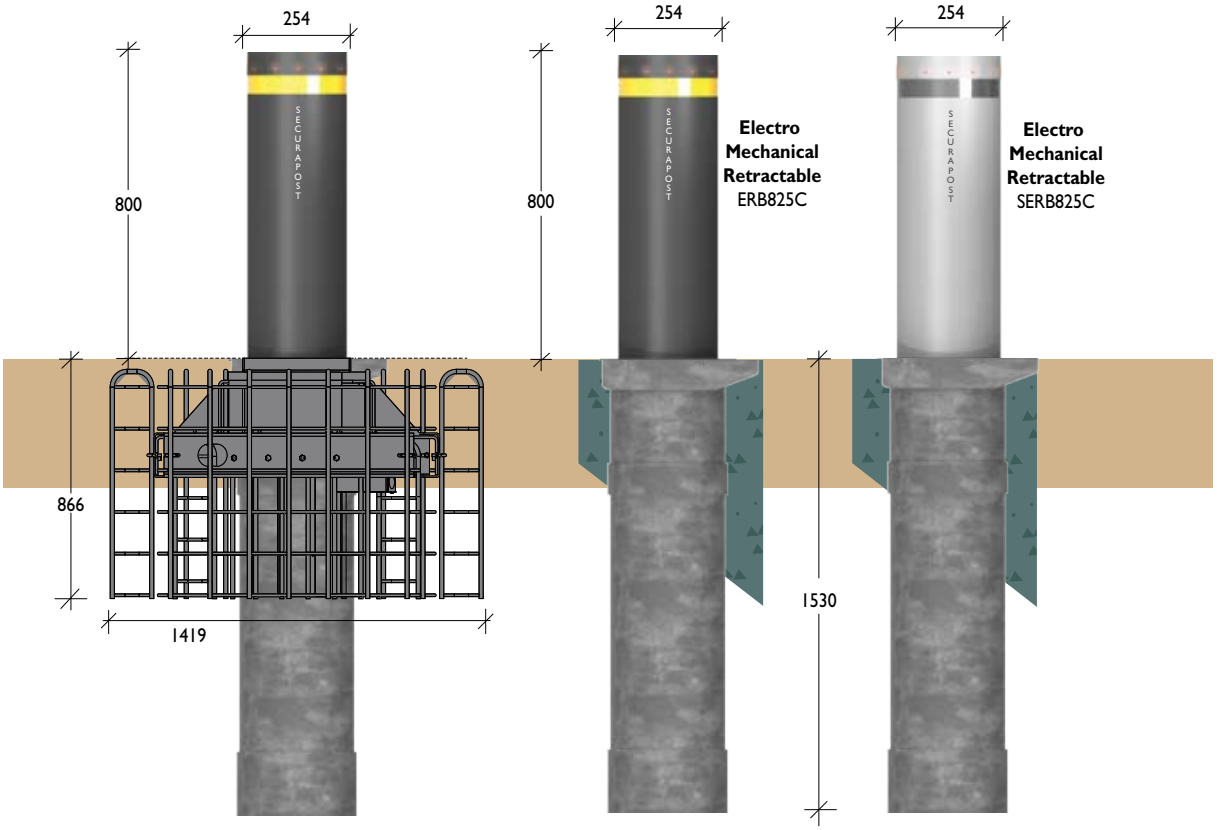

Retractable Bollards

Leda is recognised as Australia's market leader in retractable bollards, with a comprehensive range catering for vehicular access control and security applications. Retractable bollards hold distinct advantages over boom gates and other forms of vehicular access control as they provide much higher impact ratings and are pedestrian friendly.

There are two application-based product lines:

Slimline Range (Hostile Vehicle Mitigation) and **Advantage Range** (Vehicular Access Control).

Each offers a range of diameters in both mild steel (galvanised or electrostatically powder coated) and stainless steel models.

Retractable bollards can be operated 3 ways:

- Manually – by lifting handle
- Semi-automatic – gas strut power assisted or power drill (to drive up and down)
- Automatic – pneumatically or hydraulically powered.

Hostile Vehicle Mitigation (HVM)

Act as a security barrier to forced access by unauthorised, illegal or hostile vehicles.

- Government & public buildings
- Hotels & high-profile buildings
- Military installations
- Government utilities and key infrastructure
- Embassies & consulates

Vehicular Access Control (VAC)

To restrict unauthorised access to defined areas.

- Busways
- Access checkpoints, staff carparks
- Shopping centres

> *Leda has prepared impact ratings for all security bollards.*

Refer to the table on p73 for an overview of the relative strengths of all Leda security bollards.

Intro 1
Architectural 8
Stainless 12
Aluminium 28
Timber 32
Pre-cast 35
Steel 42
Plastic 48
Lighting 52
Security 62
Designing 63
Impact Rating 65
Installation 68
Products 74
Retractable 98
HVM Bollards 99
VAC Bollards 107
Industrial 112
Bollards 113
Power 124
Card Readers 128
General 134
Accessories 137
Codes Index 144

Hostile Vehicle Mitigation (HVM)
Operation Options

Manual

- Economical access control solution for low-level security applications
- Operates with a lifting handle

Semi Automatic – Gas Strut

- Gas strut enables the bollard to rise under its own stored power, making it ideal where there are weight or OH&S lifting concerns
- Locks using Leda's unique patented locking system

Power Drill Assist

- Bollard can be wound up or down using a centrally located threaded bar

Automatic – Pneumatic / Hydraulic

- Various control and operating options
- Quick raising and lowering speeds
- Reaches full 900mm extension in under 3 seconds
- Designed for continual operation (100% duty cycle)

Automatic Operation

Power Requirements

240V AC, 10A, or 3-phase 415V.
To protect against power outages, high security installations may require connection to an uninterrupted power supply (UPS).

Controller

The Programmable Control Board (PCB) or Programmable Logical Controller (PLC), located in the control cabinet, is essential for all functions and allows the flexibility to customise bollard operational requirements to suit each installation.

Operation functions can be interfaced with the building management or access control system.

Control Cabinets can be located internally in a secure room or externally in a secure weather-resistant enclosure.

Air Compressors

The size of the air compressor (to suit from 1 and up to 6 bollards) is determined once the air usage is calculated, and is dependant upon:

1. The number of bollards
2. Airline distance
3. Frequency of operation.

Refer Table below.

In certain applications, where the compressor cannot be located close enough to the bollards, it may be necessary to install an air reservoir. 3-phase silent compressors are also available as an option.

Typical Automatic Configurations

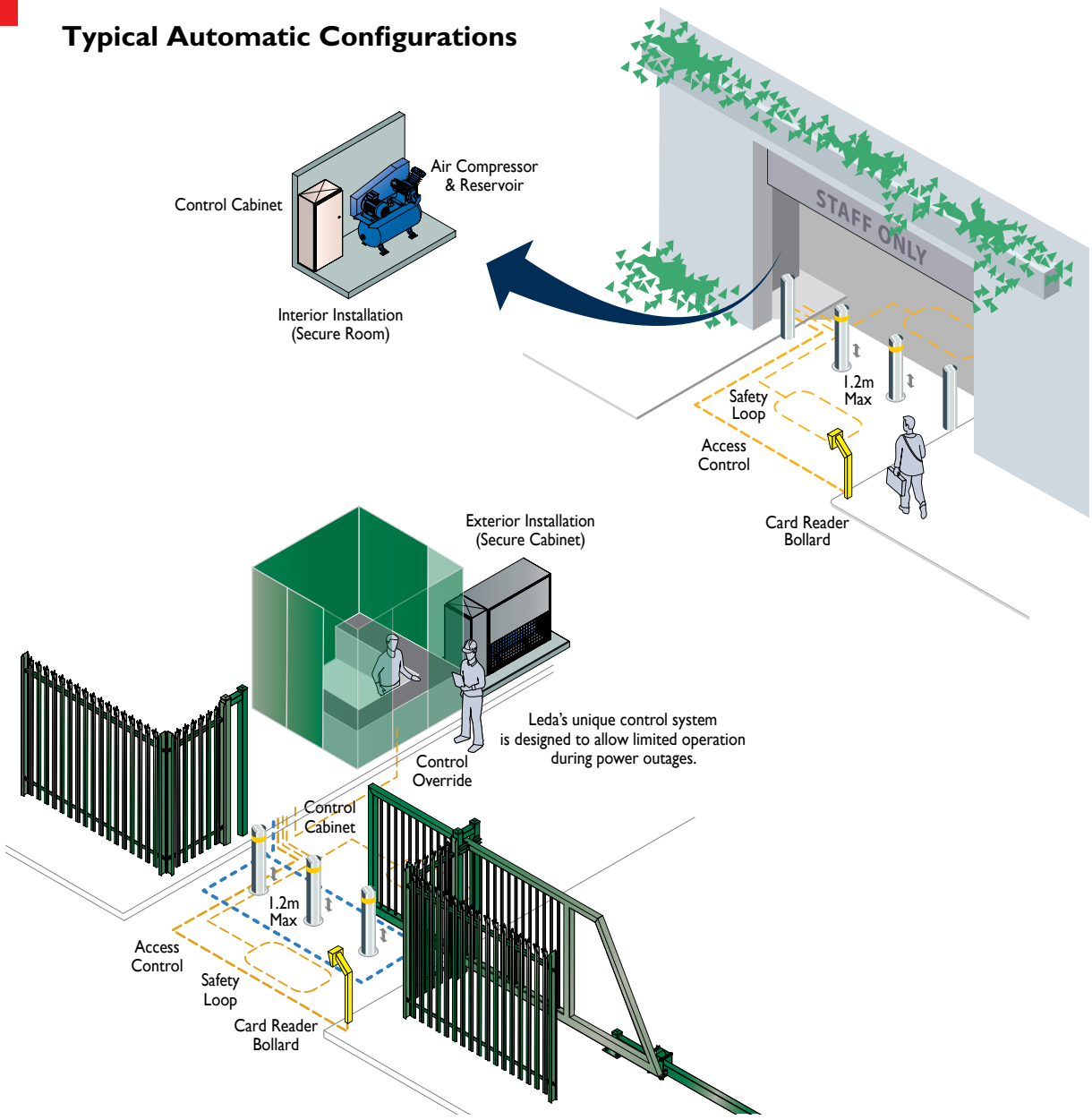

Additional Options

- Control cabinets – wall / floor mounted
- PE beams – automatic detection
- Traffic lights – for busy access points
- Safety loops – prevent accidental extension. (Override function is recommended for security applications.)
- Access control options
  - push button (guardhouse)
  - swipe card (car parks)
  - remote control (garages)
- Locks – pneumatic bollards
- Sump pumps – for areas with poor drainage. Standard 24V marine pump.

Above, use of traffic light bollards at a busy access point and left, exterior cabinet with compressor and logical controller.

Retractable bollards normally require a 1.5 to 1.6m deep excavation. Security applications require that the bollards be installed in a continuous concrete strip footing. Leda engineers can assist in the structural design of appropriate footings.

- For security applications, the footings need to be specified to meet the impact resistance and performance required by the bollards.
- Leda's engineering division can assist through all phases to ensure that security specifications are complied with.
- Leda's electrical engineers will also prepare specifications regarding the control, UPS back-up and surge protection for the installation.

Typical Installation

Showing recommended excavation

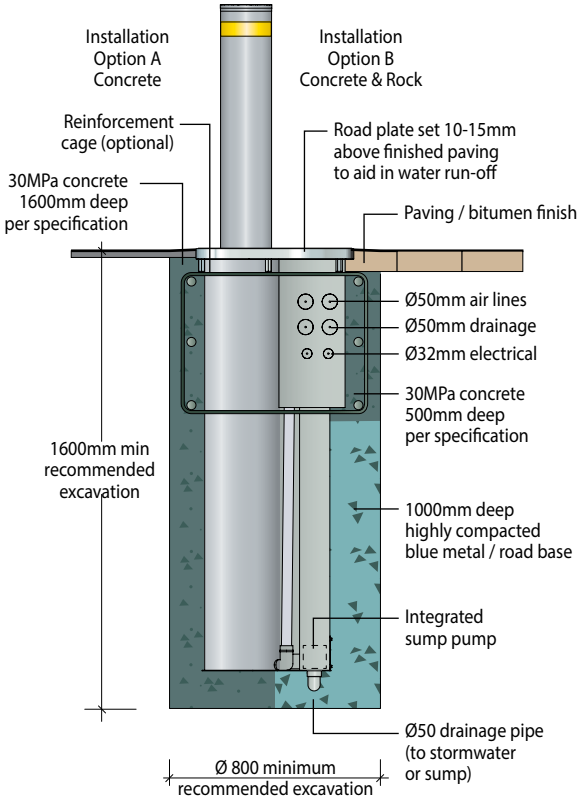

Drainage

Retractable bollards normally operate in what can be best described as a hostile environment. Water can accumulate and unless removed can lead to higher maintenance costs and reduced service life of the installation.

Leda's engineers have developed drainage systems that can be integrated into the installation to provide the necessary protection against flooding or water accumulation.

Typical Drainage Arrangement

Showing drainage pipes and sump

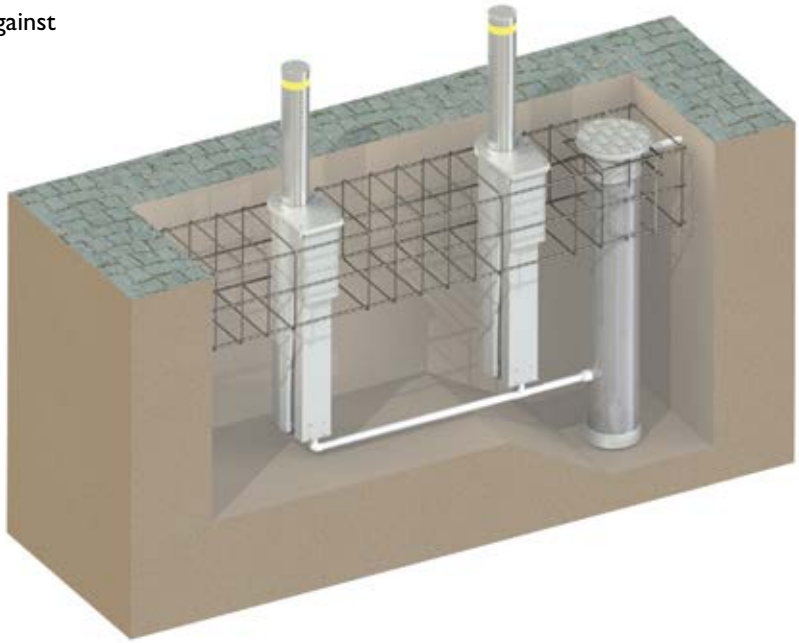

Maintenance

Retractable bollards are installed inground in hostile environments and require service and maintenance on a regular basis. Leda preventative maintenance programs are recommended for all Leda retractable bollards.
A suitable program can be tailored to suit the site.

Technical assistance

Leda boasts unrivalled service, advice and technical support and can assist in the installation process by:

1. ***Providing installation manuals*** to allow installation by third parties.
2. ***Project managing*** the civil works and electrical installation to system commissioning.
3. Carrying out ***complete installation*** from design to commissioning.

Whatever the option, Leda has the technical expertise.

How many bollards?

Leda recommends bollards been spaced at a maximum 1.2 metre centres, and that active vehicle lanes have a minimum of 2 bollards per lane to assist larger vehicles transiting the area and reduce the possibility of accidental damage. Locking and removable bollards could be considered for bollards on the extremity to allow better access for wider vehicles. For busy access points, fixed bollards can be fitted with optional traffic lights.

With branches in all major capital cities in Australia, Leda has technicians who quickly respond to call-outs, as well as ensuring bollards are fully maintained and remain in good working order.

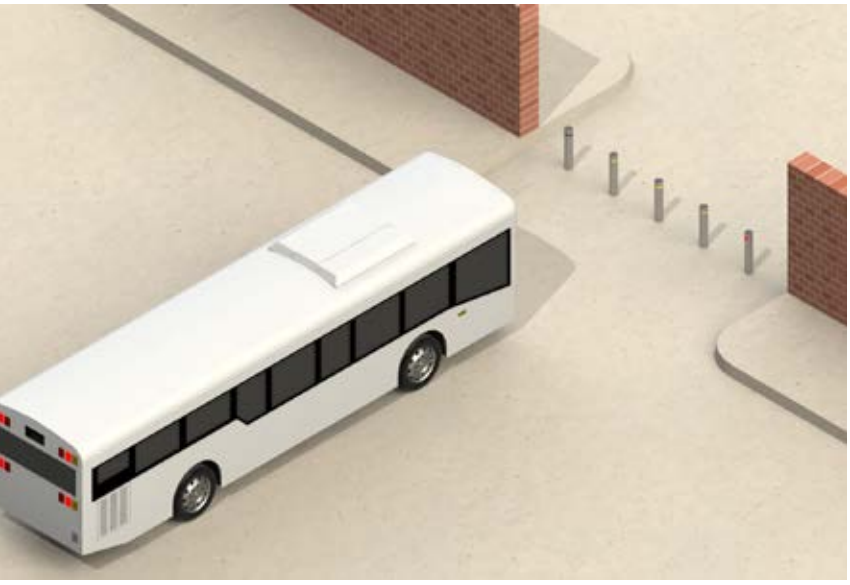

All Other Vehicles Access

Recommended maximum width of 4.8m for access points, allowing large vehicle access

Cars Only Access

Recommended maximum width of 3.6m

Products

Slimline Series
Hostile Vehicle Mitigation (HVM)

- Manual or automatic operation
- Medium to high security applications
- Impact tested and rated
- Designed to physically stop vehicles
- Taller, stronger and quicker operation
- Continuity of design with fixed and lighting bollards from Leda's stainless steel Slimline range.

For over 15 years Leda has been manufacturing and installing high security retractable bollards to protect many of Australia's high profile sites.

All levels of Australian government – federal, state and local – have turned to Leda for assistance in developing high security protection and hostile vehicle mitigation for infrastructure and public buildings.

Leda high security retractable bollards are the only Australian manufactured units to offer the high impact resistance needed in most anti-terrorist applications. Leda's extensive retractable bollard range is available as either engineered solutions or PAS 68 Certified products.

As the most experienced company in Australia installing high security physical security and with the largest range of equipment, Leda is well-positioned to assist in installing the appropriate deterrent for your site.

Ø80 Manual

Ø150 Manual

Ø150 Semi Automatic

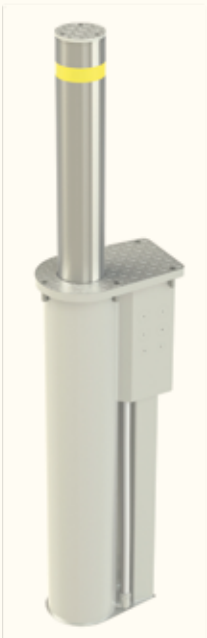

Ø150 Automatic

Ø200 Automatic

Manual Lifting Handle

Material C250LO steel pipe, steel lid / surround
Grade 304 stainless steel pipe, cast stainless steel lid / surround

Finish Galvanised or electrostatically powder coated
Linished or electro-polished

Typical 80NB stainless steel illustrated

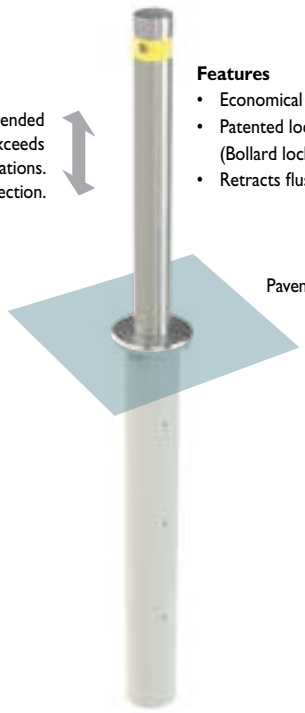

Leda's bollard lifters are recommended where bollard weight exceeds OH&S lifting weight regulations. Refer *Accessories* section.

Features

- Economical manual operation
- Patented locking system (Bollard locks in raised position)
- Retracts flush with pavement

Pavement level

80NB
88.9mm OD
wall thickness varies

Mild Steel (Galvanised)
MRB90 A (4.00mm wall) I
MRB90 B (5.90mm wall) I

Stainless Steel
SMRB90 A (3.05mm wall) I
SMRB90 B (5.49mm wall) I
SMRB90 C (7.62mm wall) I

150NB
168.3mm OD
wall thickness varies

Mild Steel (Galvanised)
MRB150A (4.88mm wall) I
MRB150B (7.11mm wall) I

Stainless Steel
SMRB150 A (3.40mm wall) I
SMRB150 B (7.11mm wall) I

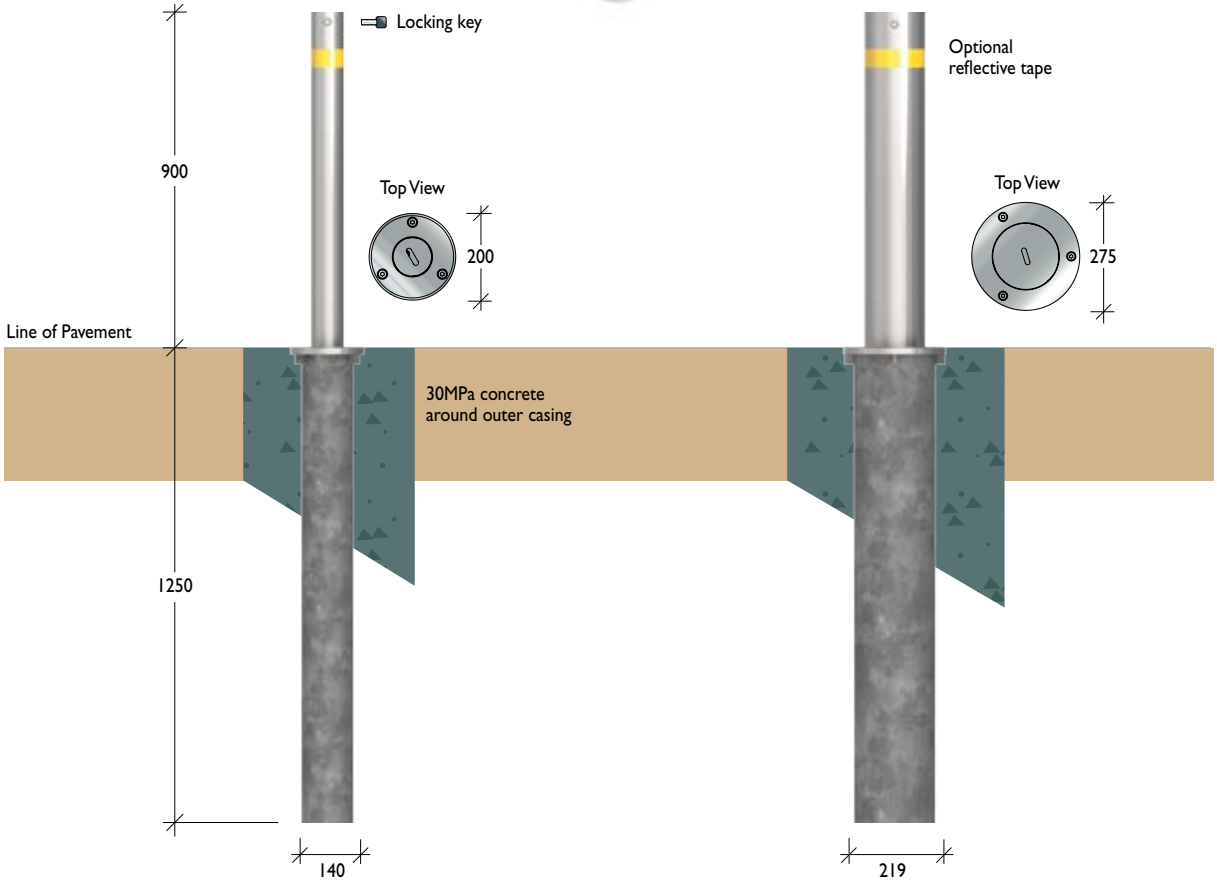

Semi Automatic
Gas Strut Assisted
Power Drill Assisted

Material ERW steel linepipe, steel lid / surround
Grade 304 stainless steel pipe, cast stainless steel lid / surround

Finish Galvanised or electrostatically powder coated
Linished or electro-polished

Typical 150NB
stainless steel illustrated

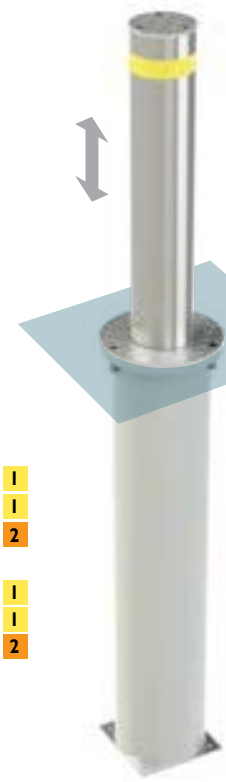

Features

- 150GS – Gas strut enables bollard to rise under its own stored power
- 150P – Power drill drives bollard up and down
- Patented locking system (Bollard locks in raised position)
- Retracts flush with pavement
- Chequer plate (non slip) lid and surround

Pavement level

Gas Strut Assisted
150NB (168.3mm OD)
wall thickness varies

Mild Steel (Galvanised)

MRB150GS A (4.80mm wall)	1
MRB150GS B (7.11mm wall)	1
MRB150GS C (10.97mm wall)	2

Stainless Steel

SMRB150GS A (3.40mm wall)	1
SMRB150GS B (7.11mm wall)	1
SMRB150GS C (10.49mm wall)	2

Power Drill Assisted
80NB (88.9mm OD) x 4.00mm wall
Mild Steel (Galvanised)
MRB80P (80NB (88.9mm OD) x 4.00mm wall) 1
Stainless Steel
SMRB80P (80NB (88.9mm OD) x 4.00mm wall) 1

Power drill

Raise key

Locking key

Optional reflective tape

Locking key

Optional reflective tape

Top View

336

900

Line of Pavement

30MPa concrete around outer casing

30MPa concrete around outer casing

1400

Retractable Range > HVM > Products

Automatic
Pneumatic

Material ERW steel linepipe, steel lid / surround
Grade 304 stainless steel pipe, cast stainless steel lid / surround

Finish Galvanised or electrostatically powder coated
Linished or electro-polished

Typical 200NB
stainless steel illustrated

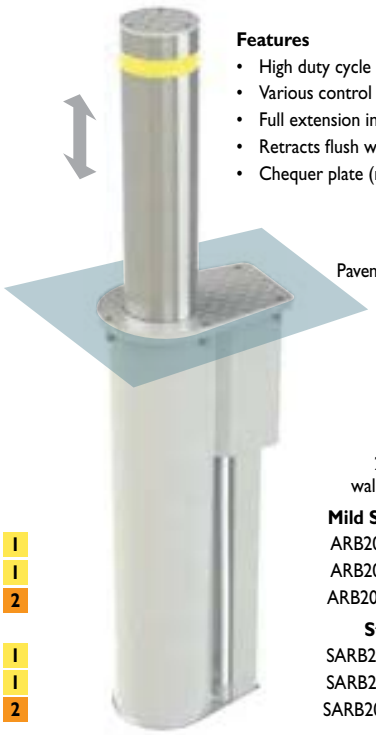

Features

- High duty cycle (100%)
- Various control options
- Full extension in under 3 seconds
- Retracts flush with pavement
- Chequer plate (non-slip) lid and surround

150NB
168.3mm OD
wall thickness varies

Mild Steel (Galvanised)

ARB150 A (4.80mm wall)	1
ARB150 B (7.11mm wall)	1
ARB150 C (10.97mm wall)	2

Stainless Steel

SARB150 A (3.40mm wall)	1
SARB150 B (7.11mm wall)	1
SARB150 C (10.49mm wall)	2

200NB
219.0mm OD
wall thickness varies

Mild Steel (Galvanised)

ARB200 A (4.80mm wall)	2
ARB200 B (8.00mm wall)	2
ARB200 C (12.50mm wall)	3

Stainless Steel

SARB200 A (3.76mm wall)	2
SARB200 B (8.18mm wall)	2
SARB200 C (12.70mm wall)	3

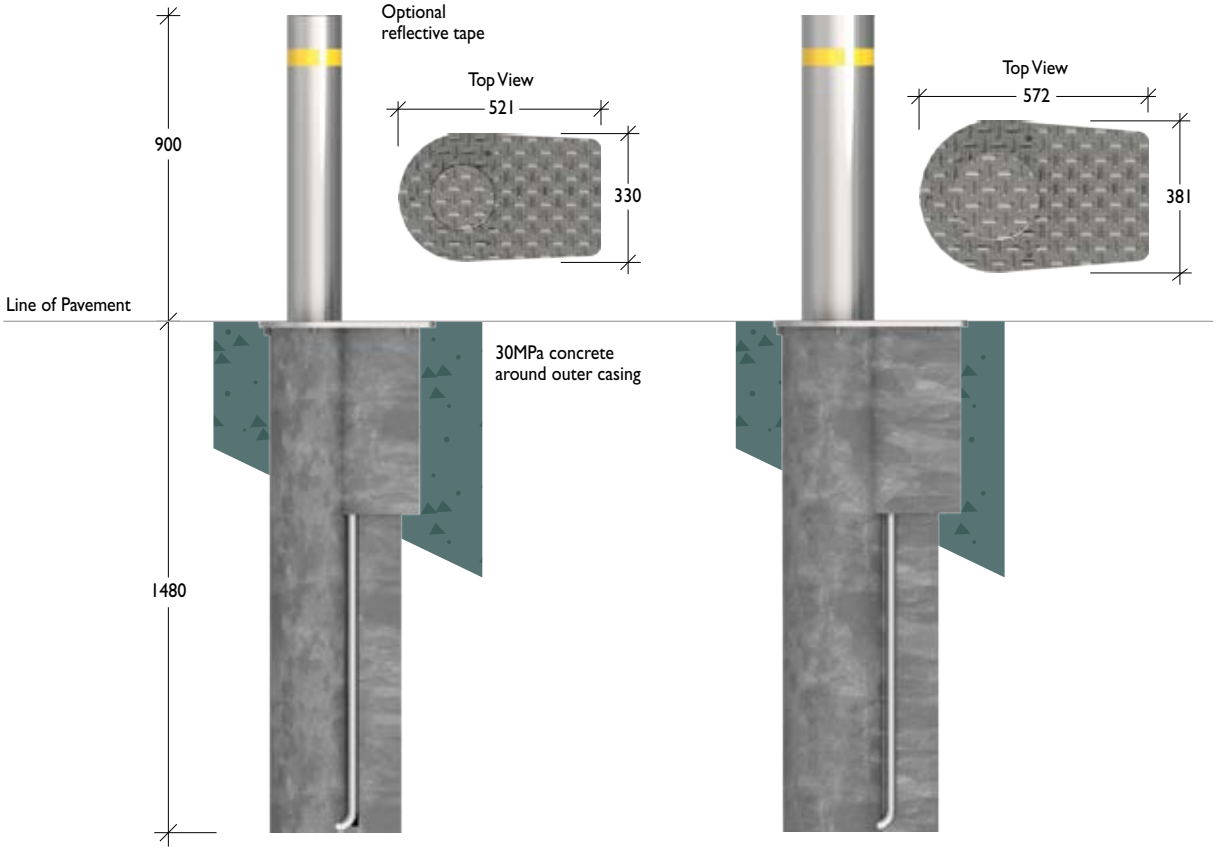

Vehicular Access Control (VAC)

Often referred to as the Advantage range, VAC retractable bollards while designed to operate continually, are not designed to physically 'stop' a vehicle. The bollards are not engineered to provide specific impact resistance and are constructed from lighter and more cost-effective materials.

It is stressed, that while VAC retractable bollards are a more economical option, they still provide excellent operating performance and functionality.

The VAC range is available in:

- Manual
- Semi-automatic – gas strut assisted
- Automatic – Pneumatic and hydraulically powered

All models have 900mm extension.

100NB Diameter

150NB Diameter

200NB Diameter

Manual

Material 100NB (Ø114) x 3.0mm Pipe
Finish Mild steel Powdercoated in a range of colours
Stainless steel Linished

DM114
Mild Steel
SDM114
Stainless Steel

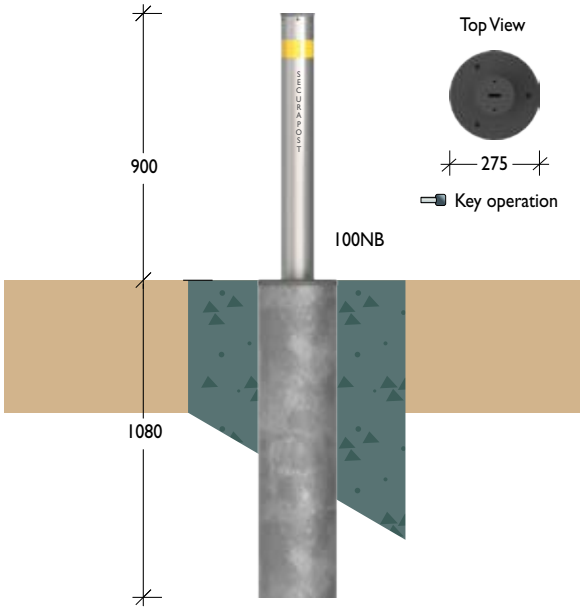

Installation

Leda boasts unrivalled service, advice and technical support and can assist in the installation process by:

1. Providing installation manuals and instructions to allow installation by third parties.
2. Project manage the civil works and electrical installation to system commissioning.
3. Carry out complete installation from design to commissioning.

Whatever the option, Leda has the expertise.

Maintenance

Leda preventative maintenance programs are recommended for all Leda retractable bollards.

Semi Automatic

Material 100NB x 6.0mm Pipe / Ø114 x 5.0mm Grade 304 stainless steel pipe
150NB x 7.0mm Pipe / Ø168 x 6.0mm Grade 304 stainless steel pipe
200NB x 6.0mm Pipe / Ø220 x 5.0mm Grade 304 stainless steel pipe
Finish Mild steel Powdercoated in a range of colours
Stainless steel Linished

DSA114
Mild Steel
SDSA114
Stainless Steel

DSA 168
Mild Steel
SDSA168
Stainless Steel

DSA 220
Mild Steel
SDSA 220
Stainless Steel

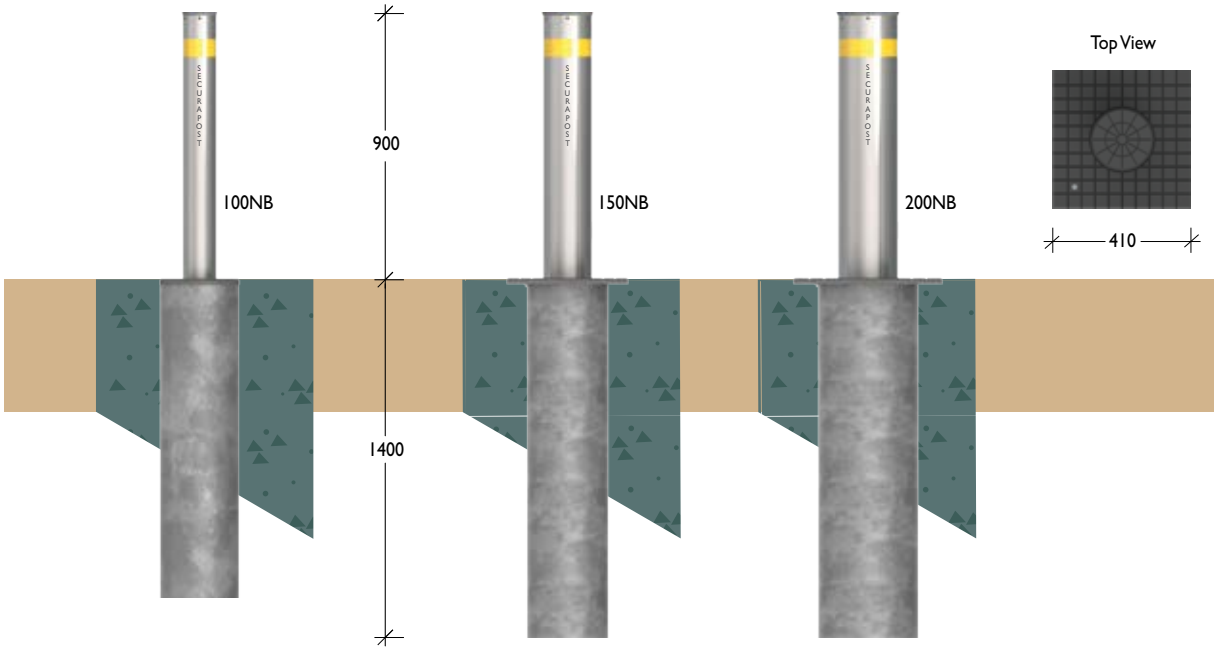

Automatic
Pneumatic

Material Ø168 x 6.0mm Pipe / Ø168 x 5.0mm Grade 304 stainless steel pipe
Ø220 x 7.0mm Pipe / Ø220 x 6.0mm Grade 304 stainless steel pipe

Features
- 900mm high extension
- Fast raise and lower speeds
- LED lightings
- Non-skid surface plate
- 240V power
- Ideal where use is highly frequent

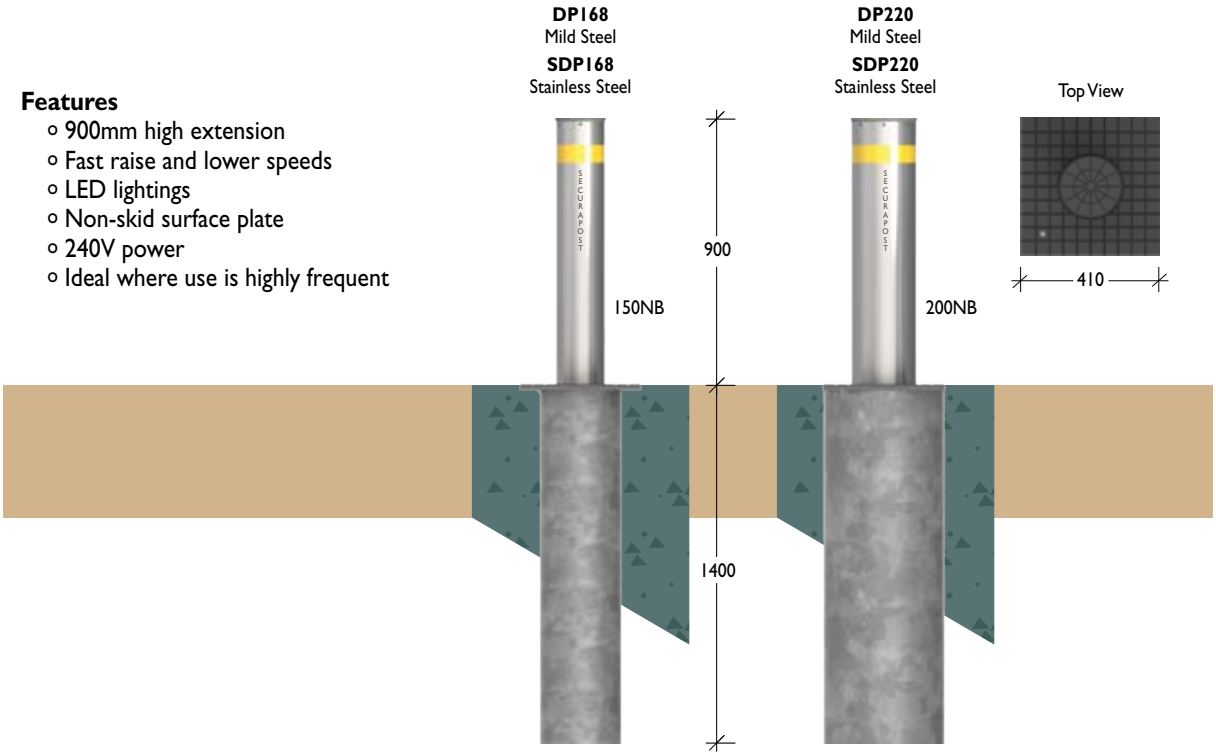

Hydraulic

Material 200NB (220) x 7.0mm Pipe / 200NB (220) x 6.0mm Grade 304 stainless steel pipe
250NB (275) x 7.0mm Pipe / 250NB (275) x 6.0mm Grade 304 stainless steel pipe

Features
- 900mm high extension
- Ideal for medium use applications
- LED lightings
- Non-skid surface plate
- 3 Phase power
- Built in hydraulic pump
- Reliability

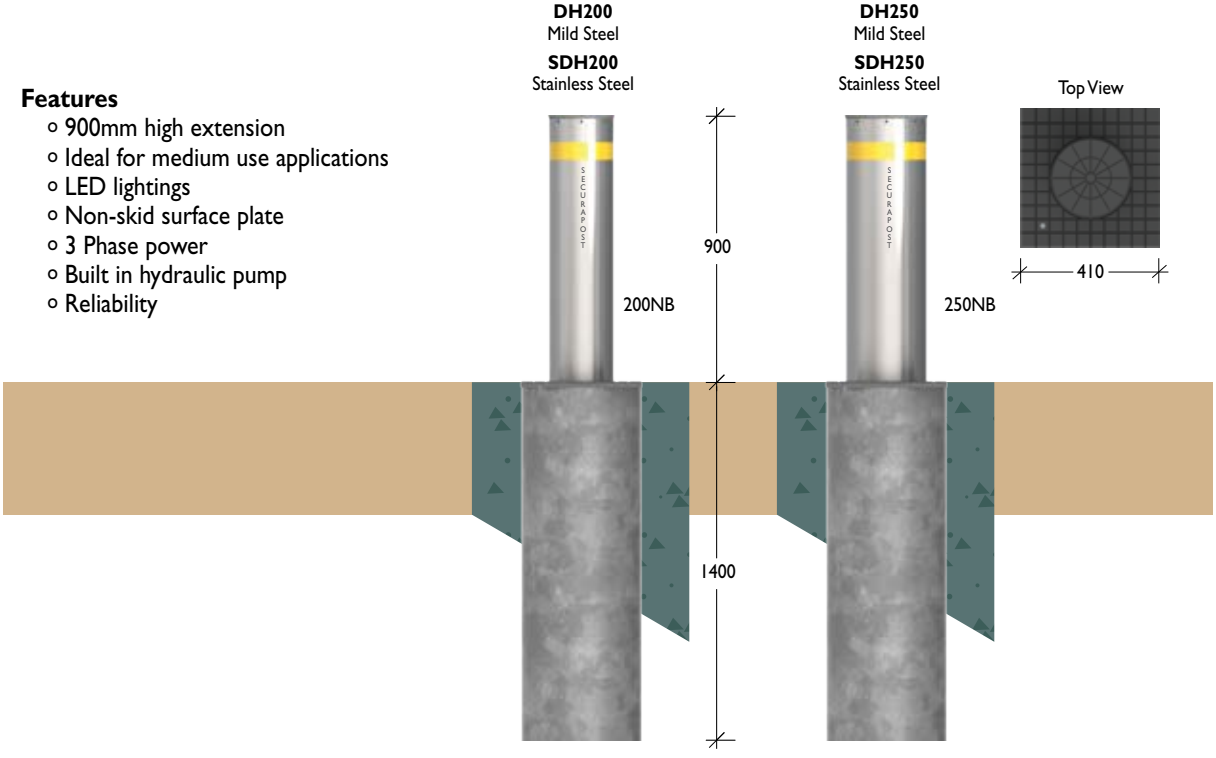

Retractable Range > ERB > Products

ERB
Electro Mechanical

Material Ø200 x 8mm wall Steel or Stainless steel
Ø254 x 10mm wall Steel or Stainless steel

Finish Powder coated or Electopolished

Helps minimise accidental damage with vehicular impacts.
Ideal for use in high traffic areas or where there is a high likelihood of bollards being impacted by vehicles. ie. Where motorists are unfamiliar with the location, as in hospital entry or carparks.

Note wall mounted control panels

Saves Space
Plug and play

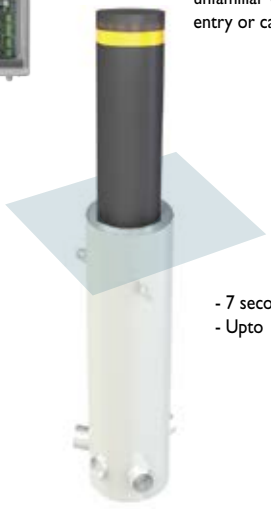

- 7 seconds Rise/Lower
- Upto 1000 cycles per day

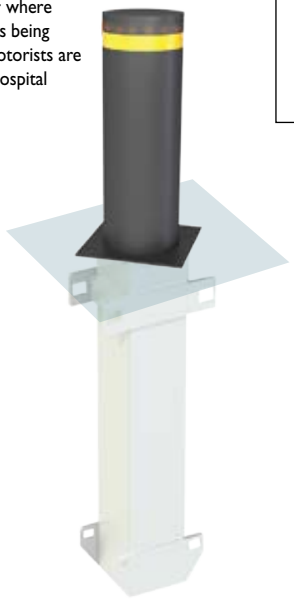

- Lights included
- 240V powered IP68 rated
- Motor supply 24Vdc
- 10 seconds Rise/Lower
- Upto 600 cycles per day
- Additional steel cage required for impact rated models
- Fail safe
- Obstacle detection
- Cables with IP69 connection

Options:
Solar power
Fail secure with UPS

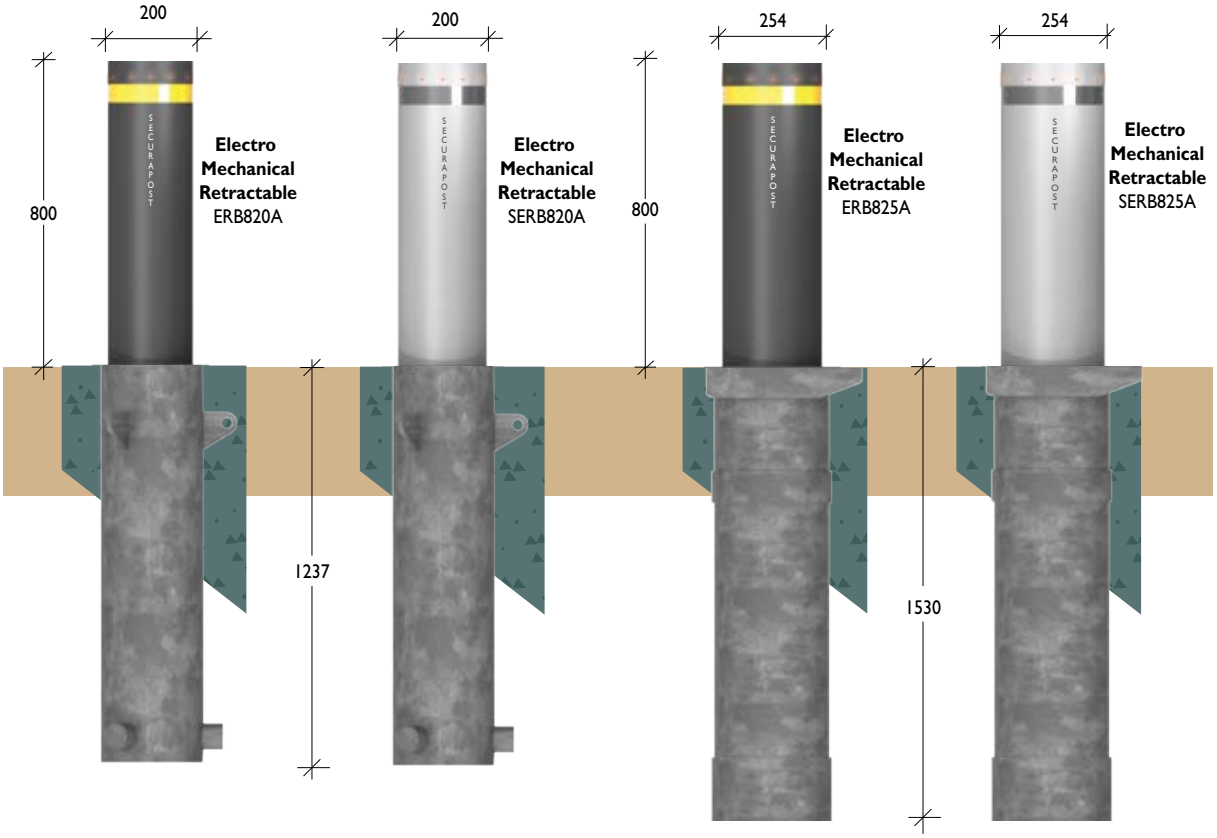

ERB
Electro Mechanical

Features:

- 230/250 Vac - 50/60 Hz Power supply
- Equipped with command ALL UP / ALL DOWN
- Diagnostic LED
- Connection via TCP/IP LAN
- 6 different configurations for loop detectors
- Prepared for any kind of command

CP1S/CP1SK

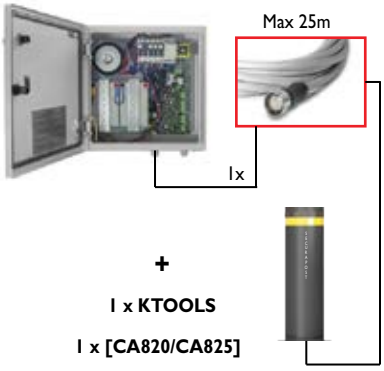

+

1 x KTOOLS

1 x [CA820/CA825]

CP2S/CP2SK

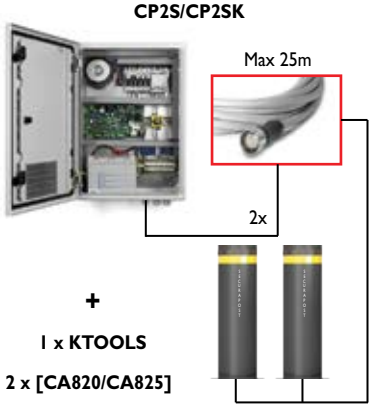

+

1 x KTOOLS

2 x [CA820/CA825]

CP4S/CP4SK

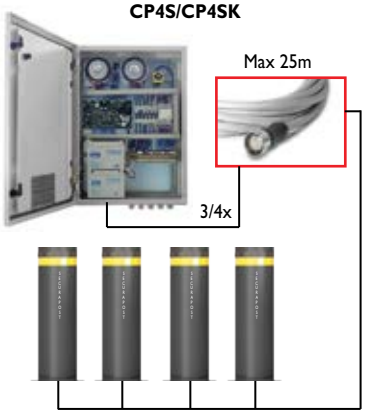

+

1 x KTOOLS

3/4 x [CA820/CA825]

Accessories

C05/10/15/20/25
Cable with connector in metres

SIR 1
Siren Detector for Emergency Vehicles

BUZZ
Warning Buzzer

CA820/CA825
Foundation Box

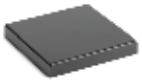

TOP 25
Cover for Foundation Box

KTOOLS
Installation Tools

Technical Drawing

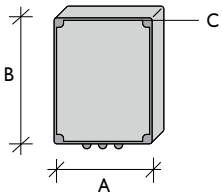

Control Cabinets

	ERB820A SERB820A	ERB825A SERB825A	ERB825C SERB825C
Power Supply	230 Vac 50/60Hz	230 Vac 50/60Hz	230 Vac 50/60Hz
Motor Supply	24 Vdc	24 Vdc	24 Vdc
Absorbed Power	90 W	90 W	90 W
Absorbed Current 24Vdc	7 A	8 A	8 A
Standby Consumption	11 W	11 W	11 W
Consumption during Rising	1, 4 A	1, 4 A	1, 4 A
Max working Frequency**	1000 cycles/day	600 cycles/day	600 cycles/day
Protection Level	IP 68	IP 68	IP 68
Operating Temperature	-20°C / +50°C	-20°C / +50°C	-20°C / +50°C
Lubrication	Grease	Grease	Grease
Impact Resistance	11 KJ	18 KJ	---
Breakout Resistance	180 KJ	240 KJ	411 KJ
KG Vehicle-Km/Hour	1.800-55	2.500-55	2.500-65
Raising Time 120mm/s	7"	10"	10"
Lowering Time 120mm/s	5"	9"	9"
Electric Brake	2N	5N	5N
Weight (w/o foundation case)	112/120kg	155/167kg	195/207kg

	A	B	C	IP GRADE
CP1S	30	40	15	IP66
CP2S	50	40	20	IP66
CP4S	60	40	20	IP66
CP1SK*	40	40	20	IP66
CP2SK*	60	40	20	IP66
CP4SK*	70	50	20	IP66

[*] Kit for ERB825C / SERB825C

[**] The maximum frequency of use indicated in the table must be understood as indicative data, referred to a single bollard connected to a control panel, at standard temperature rating (20°C, 50% humidity). In the case of unfavorable conditions the frequency of use has to be reduced.

Industrial Bollards

Leda industrial bollards are strong, tough and hard-wearing and are designed to protect plant, equipment and buildings.

In many instances, a visual deterrent is all that is needed – however, when relied upon, Leda industrial bollards are designed to physically stop vehicles from entering or leaving an area or building, or protect vital equipment and services from vehicle damage.

Products are diverse in application and cater for light industrial to extra heavy duty installations for the mining industry and other remote industrial applications.

The Industrial Range Incorporates

- Locking and removable, fixed and baseplate industrial bollards
- Economical 'no-frills' builders bollards
- Power distribution bollards
- Card reader bollards
- Other industrial products

Power Distribution Bollards

Included in the range is Australia's most comprehensive range of power distribution bollards.

- Suitable for power and / or water distribution
- Provides safe OH&S power outlets
- Designed for use in remote areas
- Lockable and secure
- Ideal for sporting fields, parks and common areas

Card Reader Bollards

A diverse range of card reader bollards compatible with virtually all access control systems.

- Steel and stainless steel
- Single and dual height
- Wall mounted and removable
- CCTV and intercom options

Intro 1
Architectural 8
Stainless 12
Aluminium 28
Timber 32
Pre-cast 35
Steel 42
Plastic 48
Lighting 52
Security 62
Designing 63
Impact Rating 65
Installation 68
Products 74
Retractable 98
HVM Bollards 99
VAC Bollards 107
Industrial 112
Bollards 113
Power 124
Card Readers 128
General 134
Accessories 137
Codes Index 144

Industrial Round

Industrial Square

Builders Bollards

Service Station Bollards

Tap Bollards

Power Distribution In-gound

Power Distribution Pull-up

Power Distribution Bollards

Power Distribution Cabinets

Wall Mounted Card Reader

Single & Double Card Reader Bollards

Card reader & CCTV Bollard

Designer Card Reader Bollards

Industrial Range > Bollards

Round
Fixed Insitu

Material 80NB (88.9) x 4.9mm HD steel pipe
100NB (114.3) x 5.4mm HD steel Pipe
125NB (139.7) x 5.4mm HD steel pipe
150NB (165.1) x 5.4mm HD steel pipe
200NB (219.1) x 4.8mm HD steel pipe
300NB (323.9) x 6.35mm HD steel pipe

Finish Galvanised or powder coated
in black or industrial yellow
Optional range of colours available on request

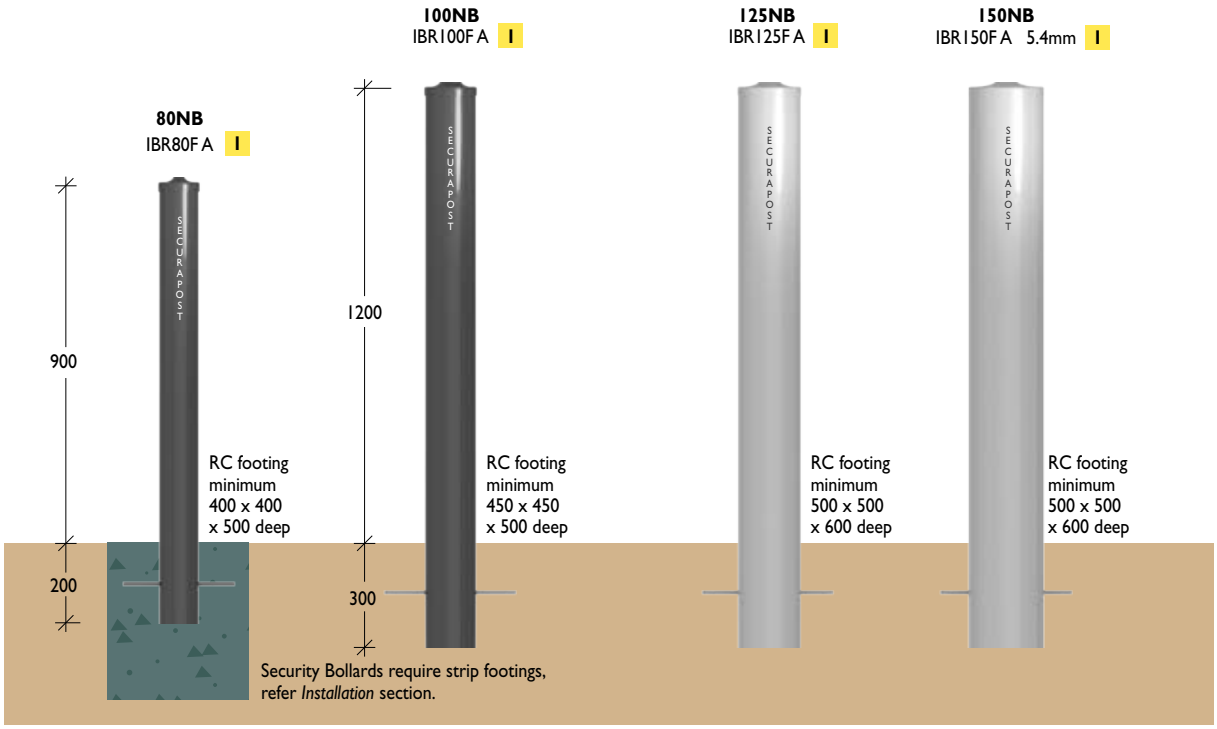

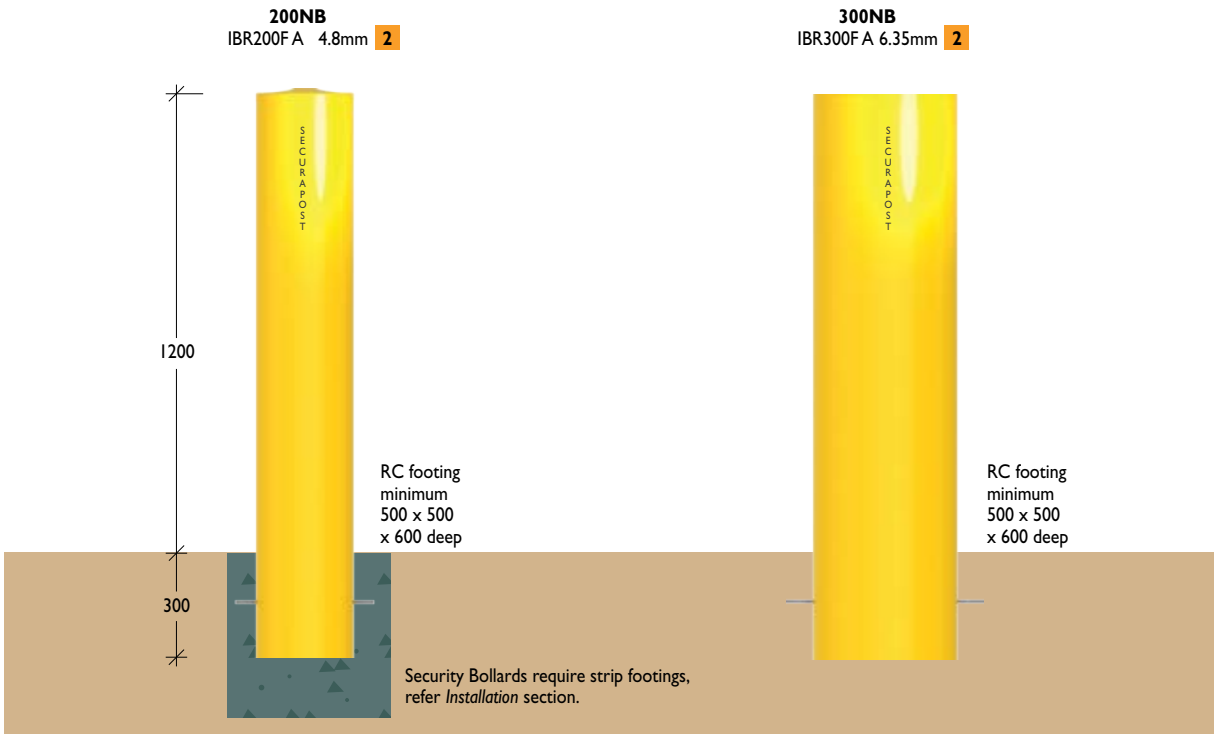

Round
Fixed Baseplate

Material 80NB (88.9) x 4.9mm HD steel pipe
100NB (114.3) x 5.4mm HD steel pipe
125NB (139.7) x 5.4mm HD steel pipe
150NB (165.1) x 5.4 / 11.0mm HD steel pipe
200NB (219.1) x 4.8mm HD steel pipe
300NB (323.9) x 6.35mm HD steel pipe

Finish Galvanised or powder coated
in black or industrial yellow
Optional range of colours available on request

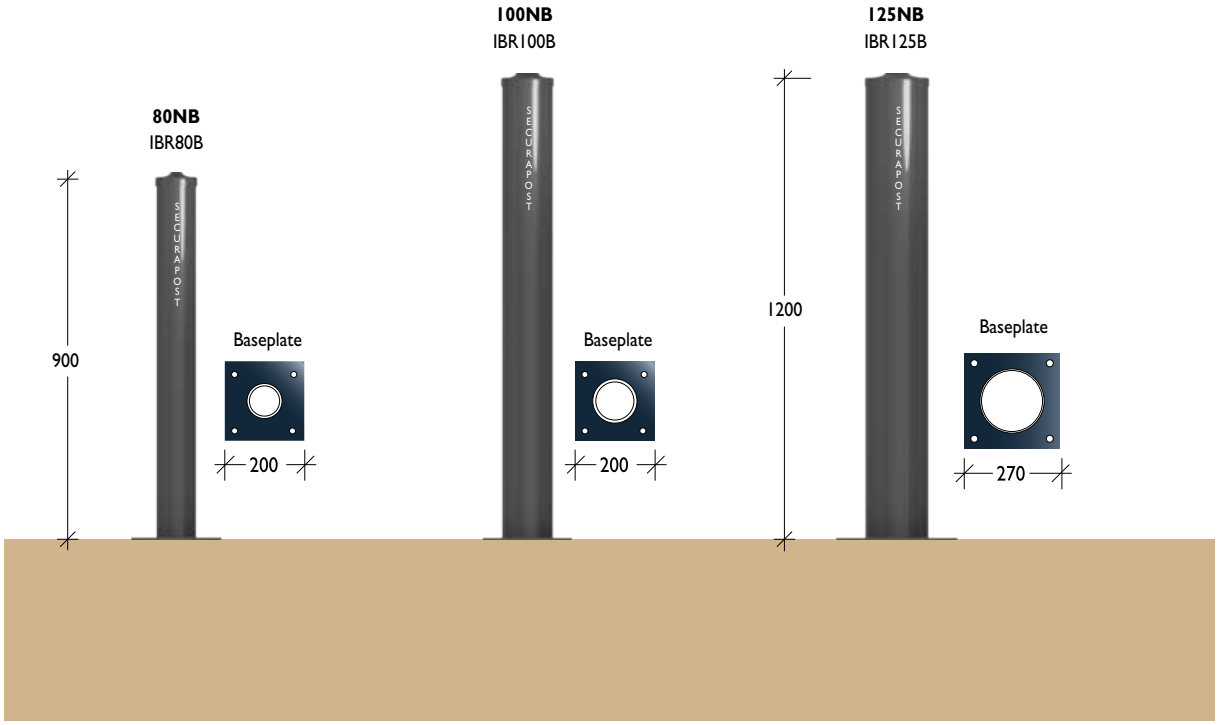

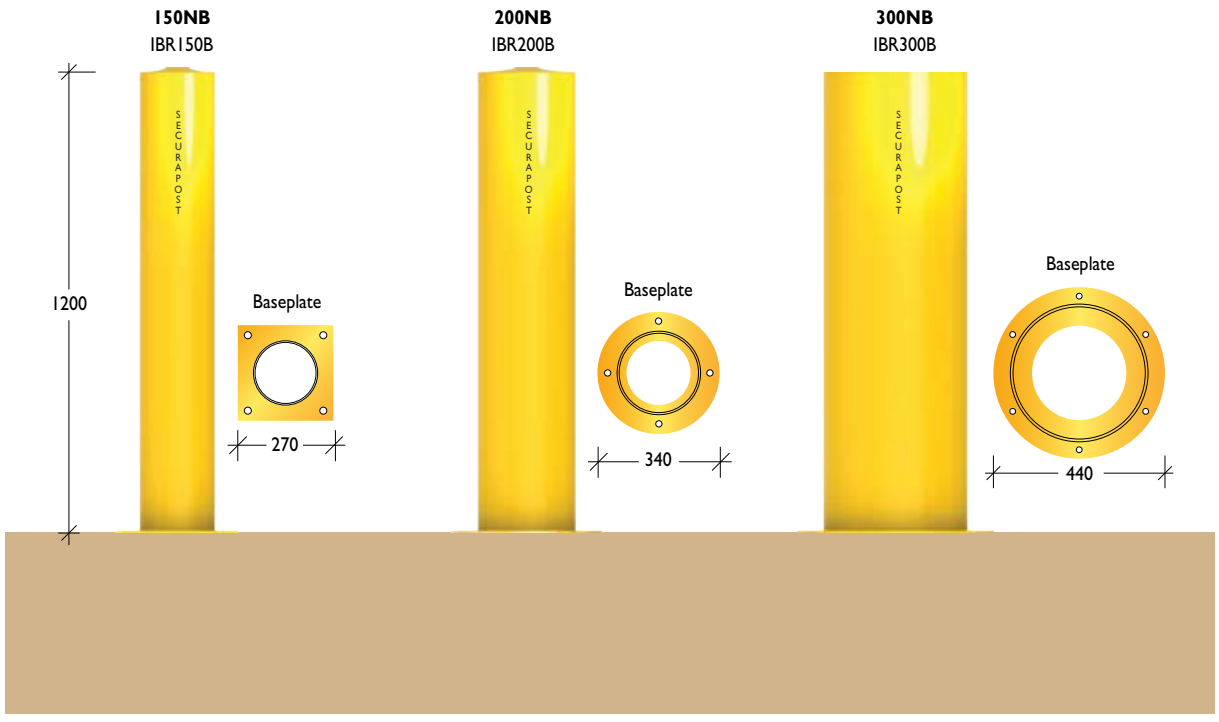

Industrial Range > Products

Square

Material Heavy duty galvanised RHS (Rectangular Hollow Section)
100 x 100 x 4mm
150 x 150 x 5mm
100 x 200 x 4mm

Finish Galvanised or powder coated
in black or industrial yellow
Optional range of colours available on request

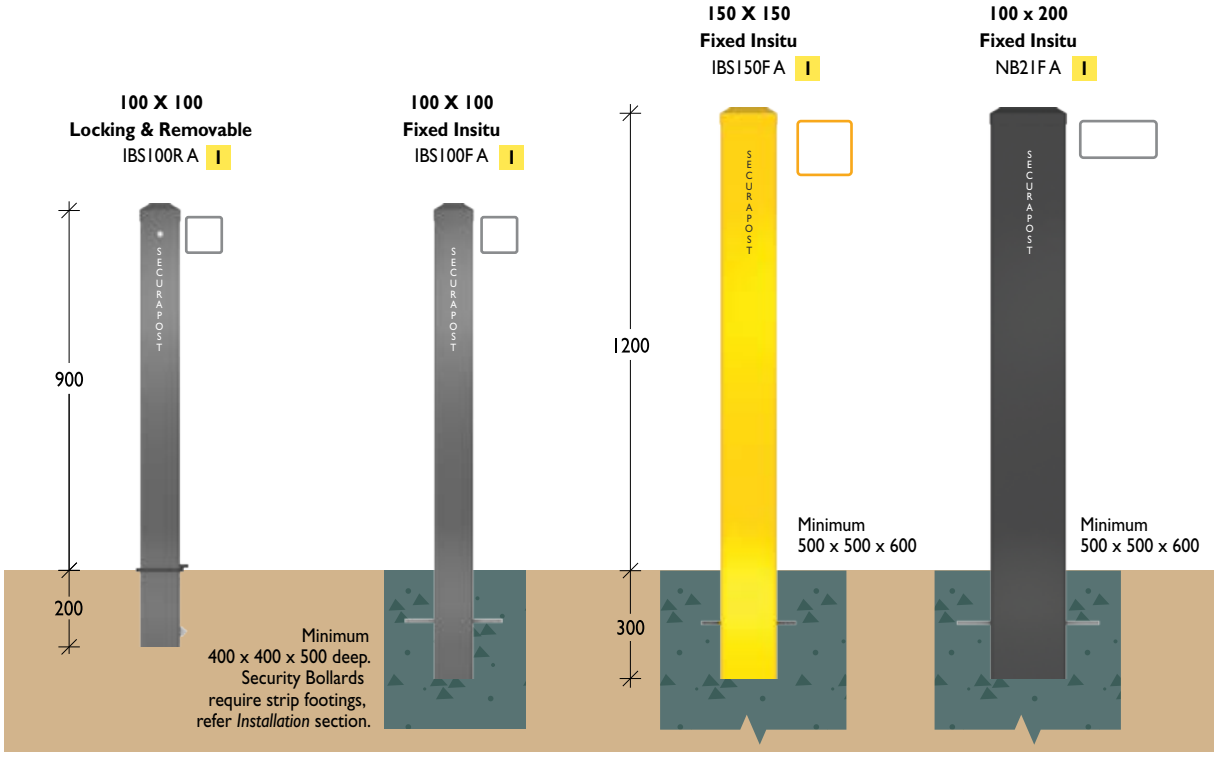

Fixed Baseplate

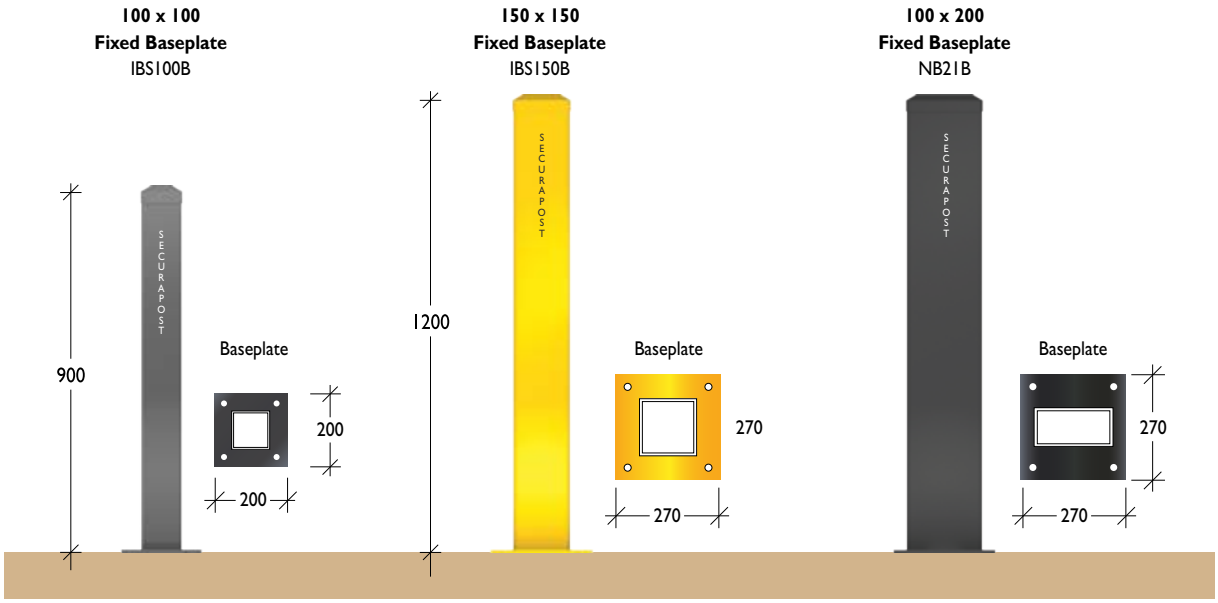

Service Station

Super XP

Material 600NB (609.8mm) x 9.50mm Line pipe
Finish Electrostatically powder coated in a range of colours

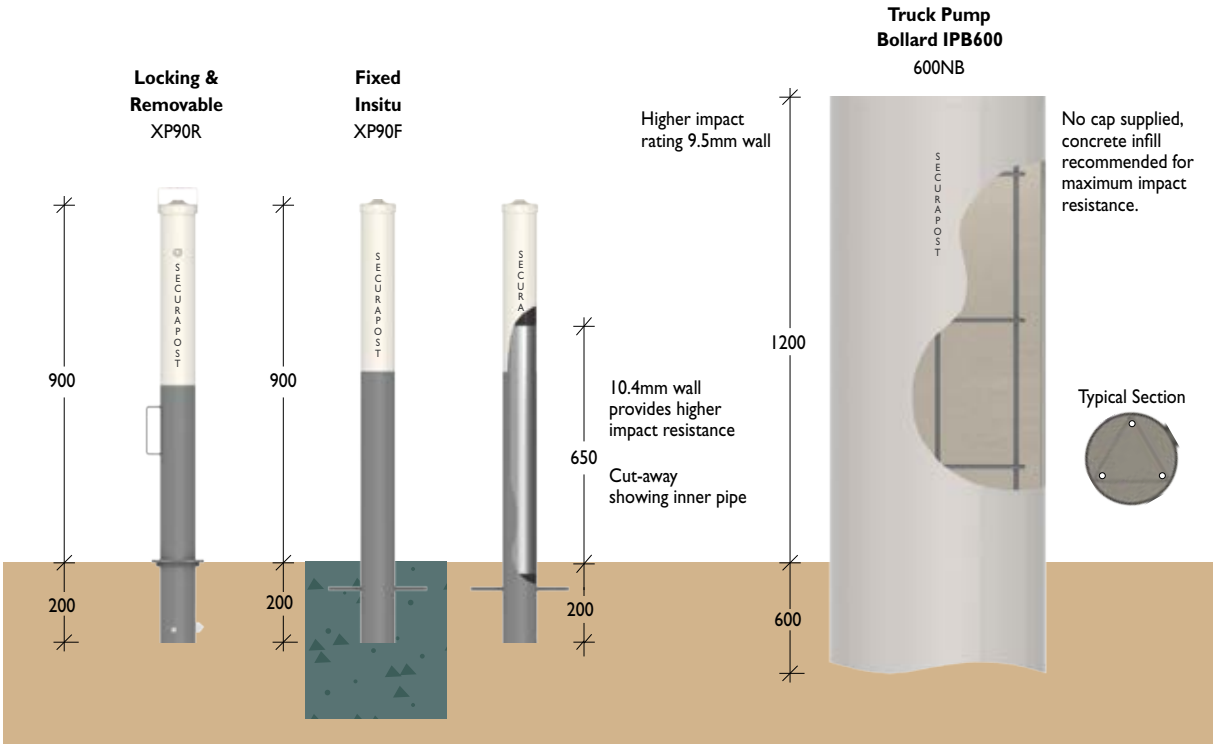

Square

Material 80NB (88.9) x 5.0mm heavy duty galvanised pipe
Finish Hot dipped galvanised or powdercoated in a range of colours

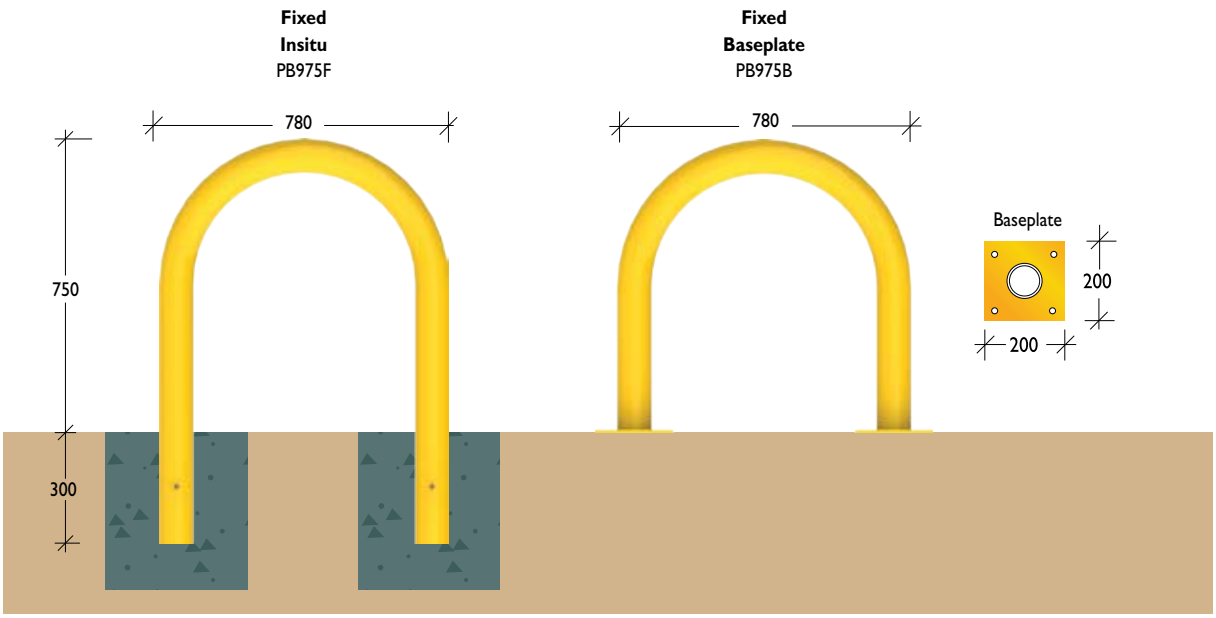

Industrial Range > Bollards

Tap Bollards

Round

Material 125NB (139.7) x 4.9mm steel pipe
125NB (141.3) x 3.4mm grade 304 stainless steel pipe
Finish Mild steel Electrostatically powdercoated in a range of colours
Stainless steel Linished

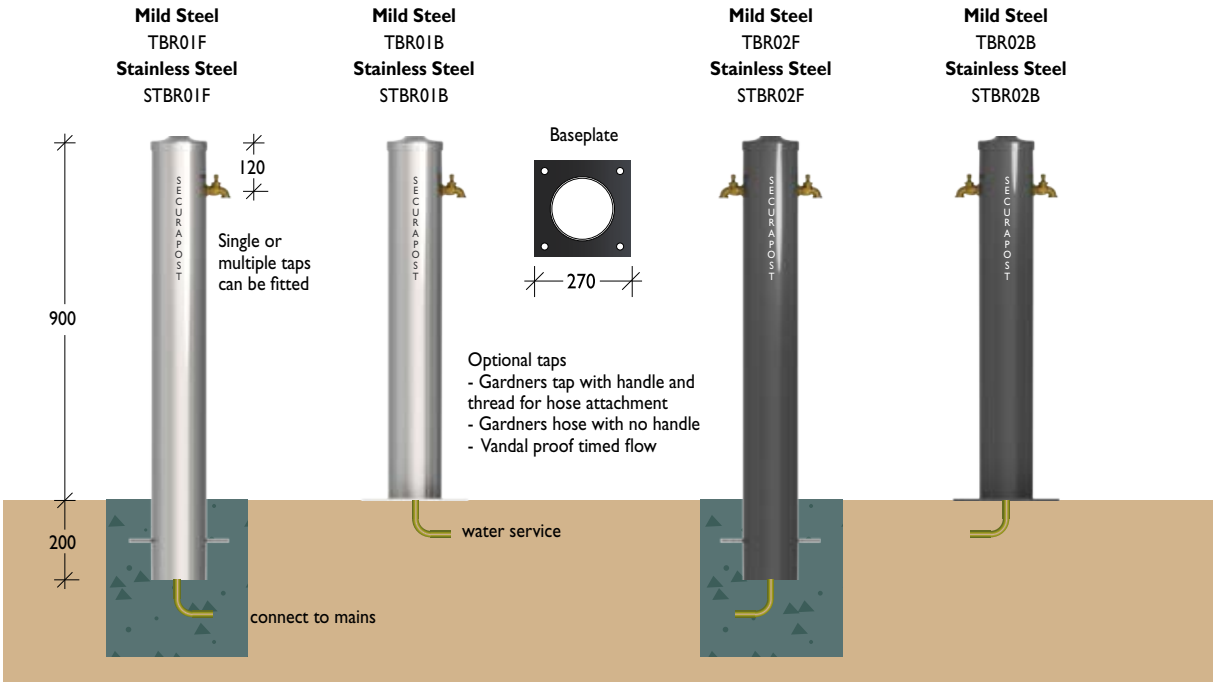

Square

Material 100 x 100 x 3.0mm RHS
100 x 100 x 3.0mm grade 304 stainless steel RHS
Finish Mild steel Electrostatically powdercoated in a range of colours
Stainless steel Linished

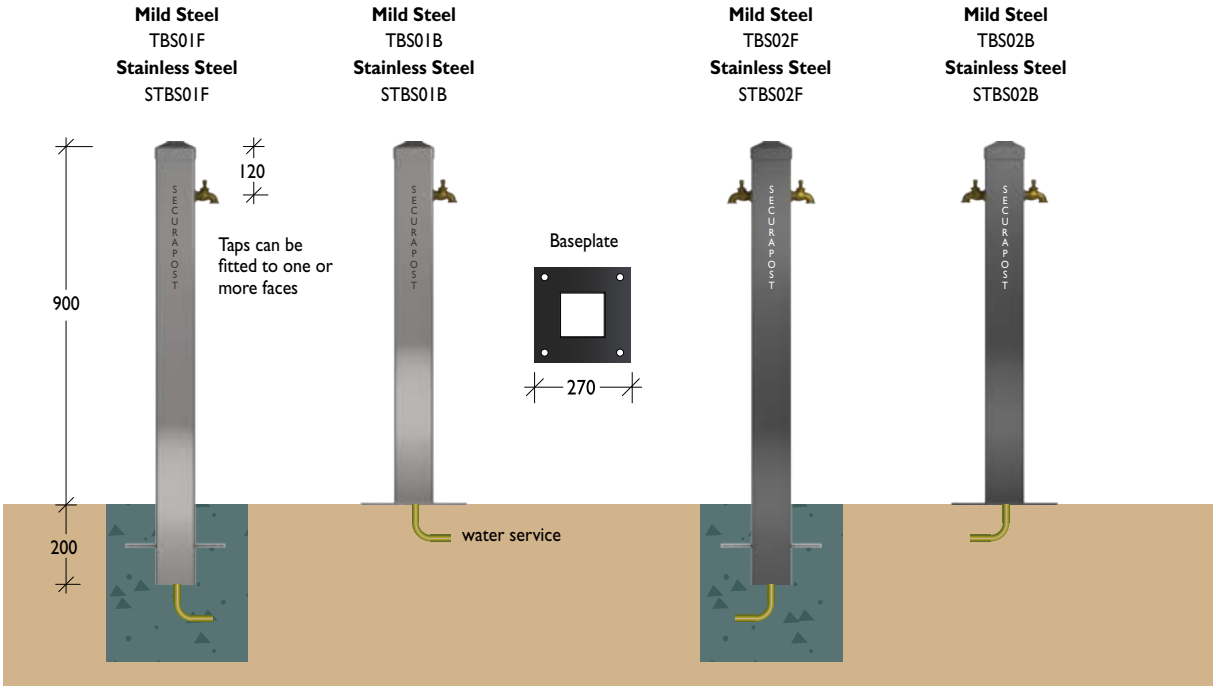

Caltex

Material 80NB (88.9) /150NB (168.3) HD steel pipe

Finish Electrostatically powder coated in a range of colours

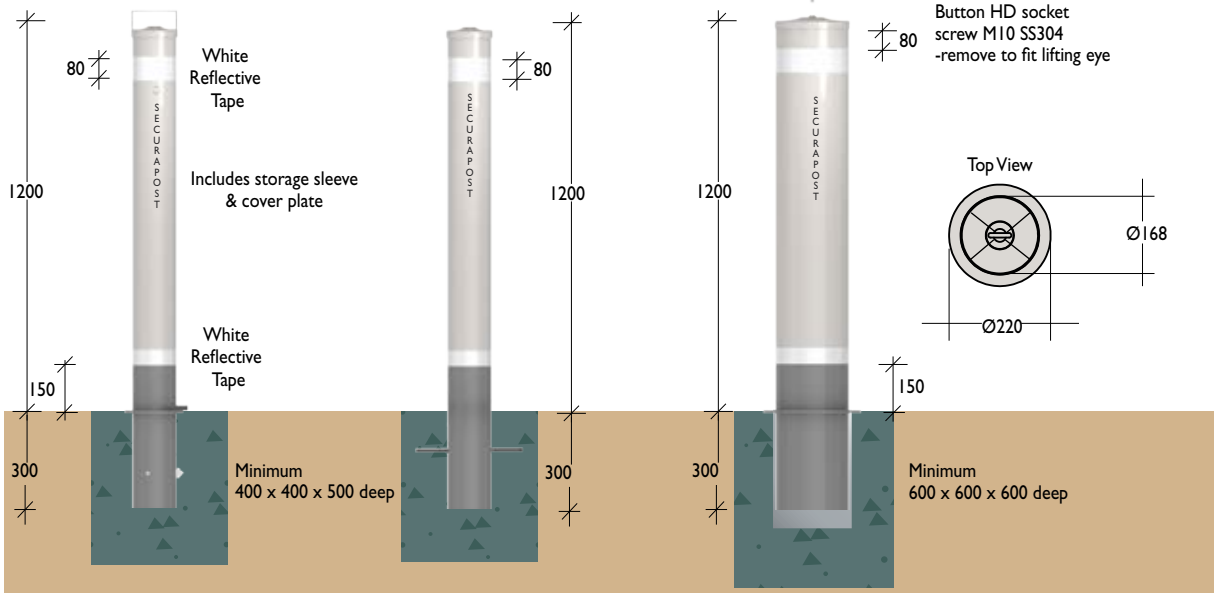

Builders Bollards

Fixed Baseplate

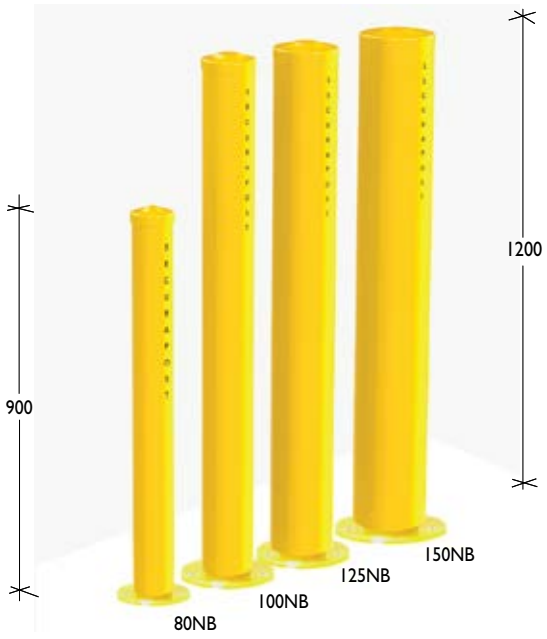

The Economical Option

Builders Bollards are a no-frills, economical range and can be ordered online and paid by credit card.

Material
Six diameters available:

BB80B	80NB (88.9OD) x 3.2mm steel pipe
BB100B	100NB (114.3OD) x 3.6mm steel pipe
BB125B	125NB (139.7OD) x 3.5mm steel pipe
BB150B	150NB (165.1OD) x 3.5mm steel pipe

Note: Wall thickness is subject to change, depending upon material availability.

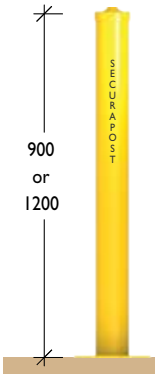

Finish
Powdercoated in golden yellow.

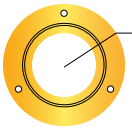

Baseplate Diameters	
80NB	Ø166
100NB	Ø220
125NB	Ø220
150NB	Ø246

Fixed Insitu

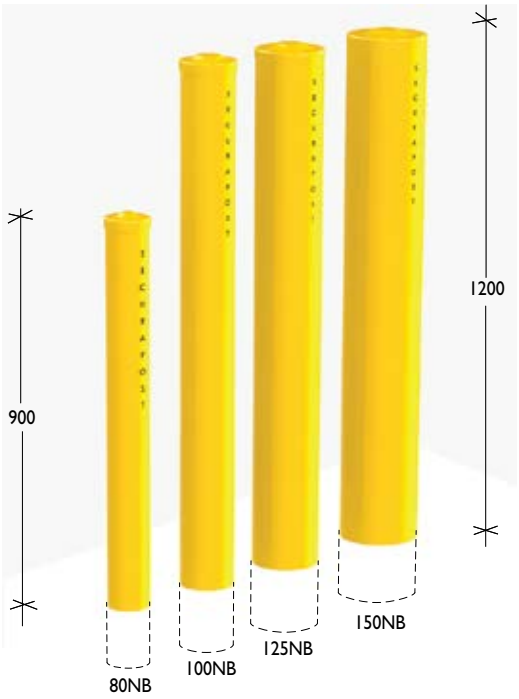

The Economical Option

Material
Six diameters available:

BB80F	80NB (88.9OD) x 3.2mm steel pipe
BB100F	100NB (114.3OD) x 3.6mm steel pipe
BB125F	125NB (139.7OD) x 3.5mm steel pipe
BB150F	150NB (165.1OD) x 3.5mm steel pipe

Note: Wall thickness is subject to change, depending upon material availability.

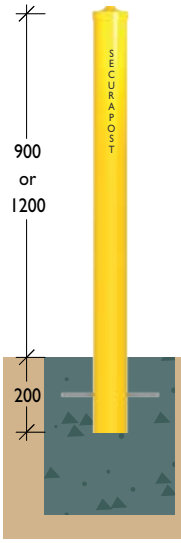

Finish
Powdercoated in golden yellow.

Minimum
350 x 350 x 500 deep.
Security Bollards
require strip footings,
refer *Installation* section.

Builders Bollards

Locking & Removable

The Economical Option

Builders Bollards are a no-frills, economical range and can be ordered online and paid by credit card.

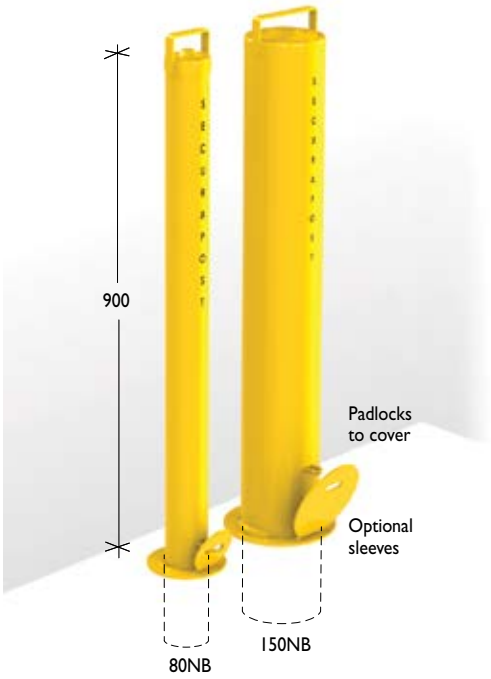

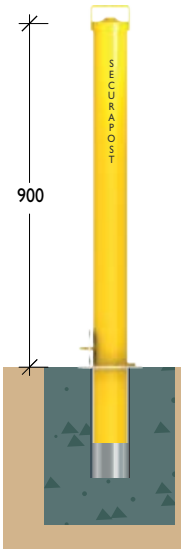

Material
Two diameters available:
BB80P 80NB (88.9) x 3.2mm mild steel pipe
BB150P 150NB (165.1) x 3.5mm mild steel pipe

Note: Wall thickness is subject to change, depending upon material availability.

Finish
Powdercoated in golden yellow.

Sleeve Options
Two sleeve options:
SL80R / SL150R Cast-in sleeve
SHCP80H / SHCP150H with hinged cover plate

Minimum
350 x 350 x 500 deep for BB80P &
400 x 400 x 500 deep for BB150P.
Security Bollards
require strip footings,
refer *Installation* section.

Retractable

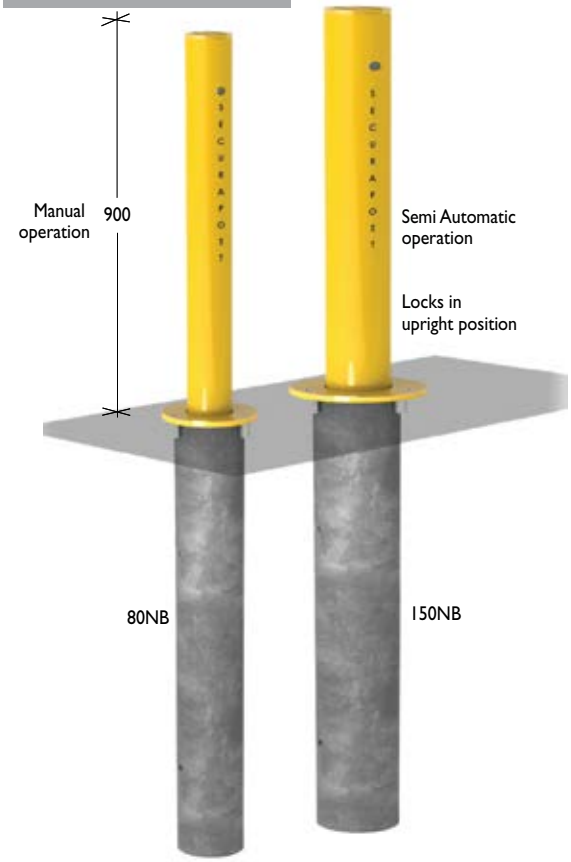

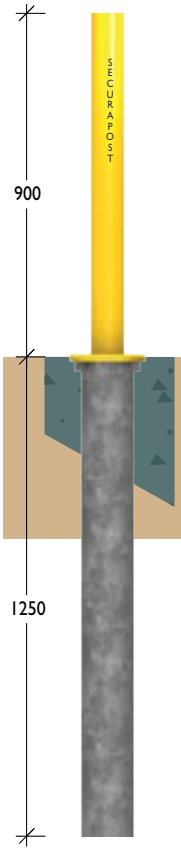

Material
Two diameters available:
BB80R 80NB (88.9) x 3.2mm mild steel pipe
BB150R 150NB (165.1) x 3.5mm mild steel pipe

Note: Wall thickness is subject to change, depending upon material availability.

Finish
Powdercoated in golden yellow.

Builders Bollards

Fixed Baseplate

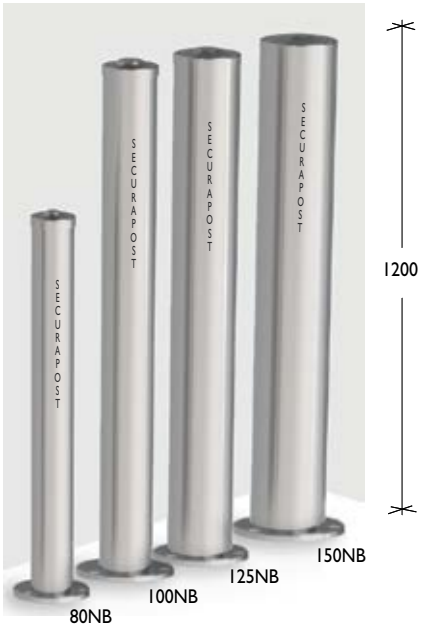

The Economical Option

Builders Bollards are a no-frills, economical range and can be ordered online and paid by credit card.

Material
Five diameters available:

SBB80B	80NB (88.9OD) x 3mm steel pipe
SBB100B	100NB (114.3OD) x 3.5mm steel pipe
SBB125B	125NB (139.7OD) x 3.5mm steel pipe
SBB150B	150NB (165.1OD) x 3.5mm steel pipe
SBB200B	200NB (219.1OD) x 5.0mm ERW pipe

Note: Wall thickness is subject to change, depending upon material availability.

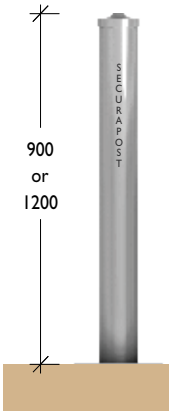

Finish
Stainless steel

Baseplate

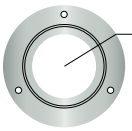

Baseplate Diameters	
80NB	Ø166
100NB	Ø220
125NB	Ø220
150NB	Ø246

Fixed Insitu

The Economical Option

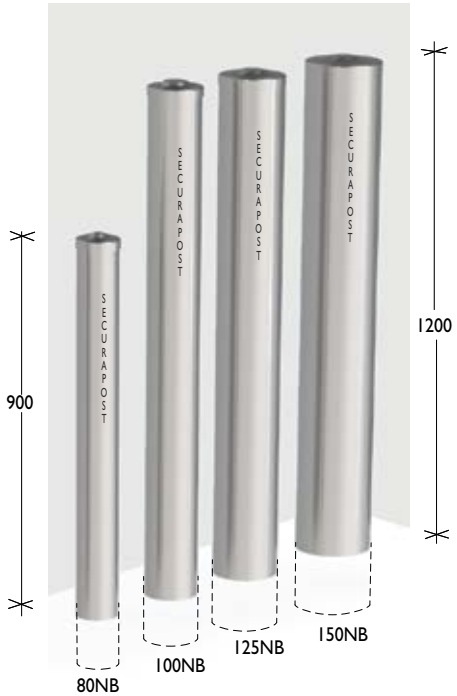

Material
Five diameters available:

SBB80F	80NB (88.9OD) x 3mm steel pipe
SBB100F	100NB (114.3OD) x 3.5mm steel pipe
SBB125F	125NB (139.7OD) x 3.5mm steel pipe
SBB150F	150NB (165.1OD) x 3.5mm steel pipe
SBB200F	200NB (219.1OD) x 5.0mm ERW pipe

Note: Wall thickness is subject to change, depending upon material availability.

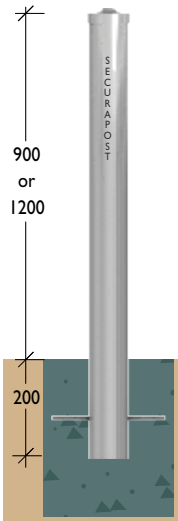

Finish
Stainless steel

Minimum
350 x 350 x 500 deep.
Security Bollards
require strip footings,
refer *Installation* section.

Builders Bollards
Locking & Removable

The Economical Option

Builders Bollards are a no-frills, economical range and can be ordered online and paid by credit card.

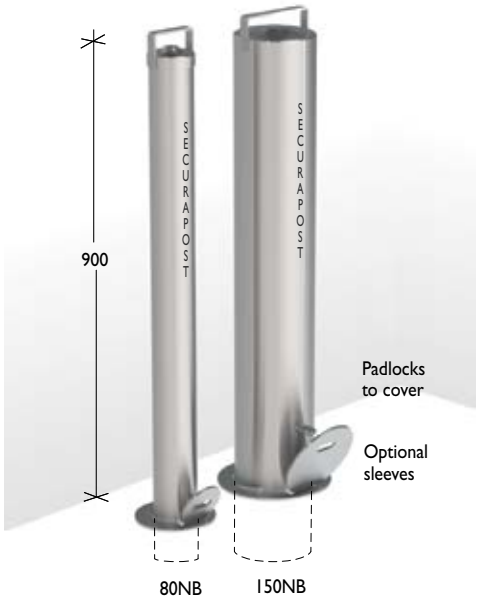

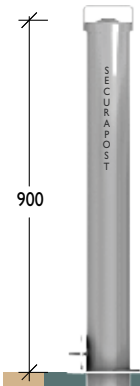

Material
Two diameters available:
SBB80P 80NB (88.9) x 3mm mild steel pipe
SBB150P 150NB (165.1) x 3.5mm mild steel pipe

Note: Wall thickness is subject to change, depending upon material availability.

Finish
Stainless steel

Sleeve Options
Two sleeve options:
SL80R / SL150R Cast-in sleeve
SHCP80H / SHCP150H with hinged cover plate

Minimum
350 x 350 x 500 deep.
Security Bollards require strip footings, refer *Installation* section.

Retractable

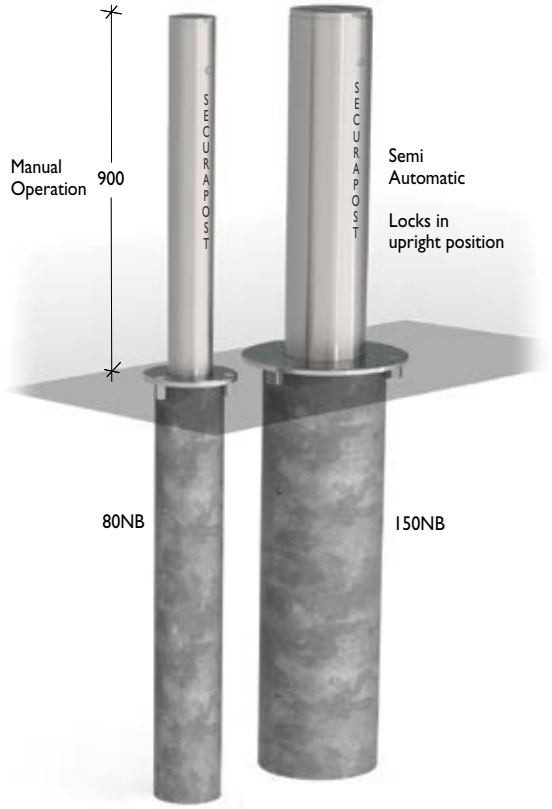

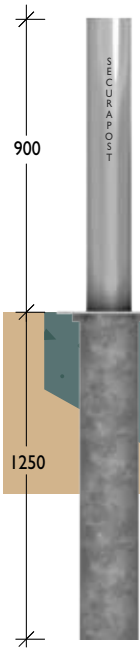

Material
Two diameters available:
SBB80R 80NB (88.9) x 3mm mild steel pipe
SBB150R 150NB (165.1) x 3.5mm mild steel pipe

Note: Wall thickness is subject to change, depending upon material availability.

Finish
Stainless steel

Industrial Range > Power Distribution

Titan 200NB

Material Steel – 200NB (219.1) x 4.8mm pipe
Stainless Steel – 200NB (219.0) x 3.76mm pipe

Finish Steel - Electrostatically powder coated or hot dipped galvanised
Stainless steel – Linished or electro-polished

Leda power bollards are designed for use with Clipsal 56 Series switch gear. Electrical installation must be carried out by a licensed electrical contractor to comply with SAA wiring rules (AS3000) and any additional requirements of statutory authorities.

- Lockable and secure
- Power and / or water outlets
- Designed for use in remote areas
- Safe

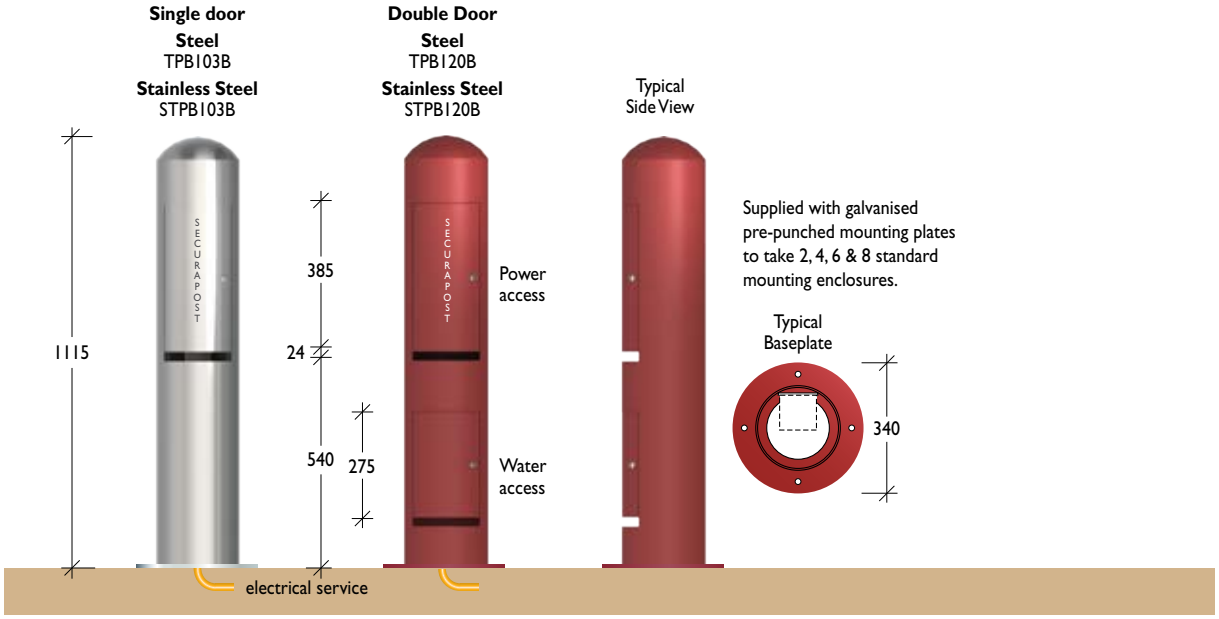

Titan 300NB

Material Steel – 300NB (323.9) x 6.4mm pipe
Stainless Steel – 200NB (323.4) x 4.57mm pipe

Finish Steel - Electrostatically powder coated or hot dipped galvanised
Stainless steel – Linished or electro-polished

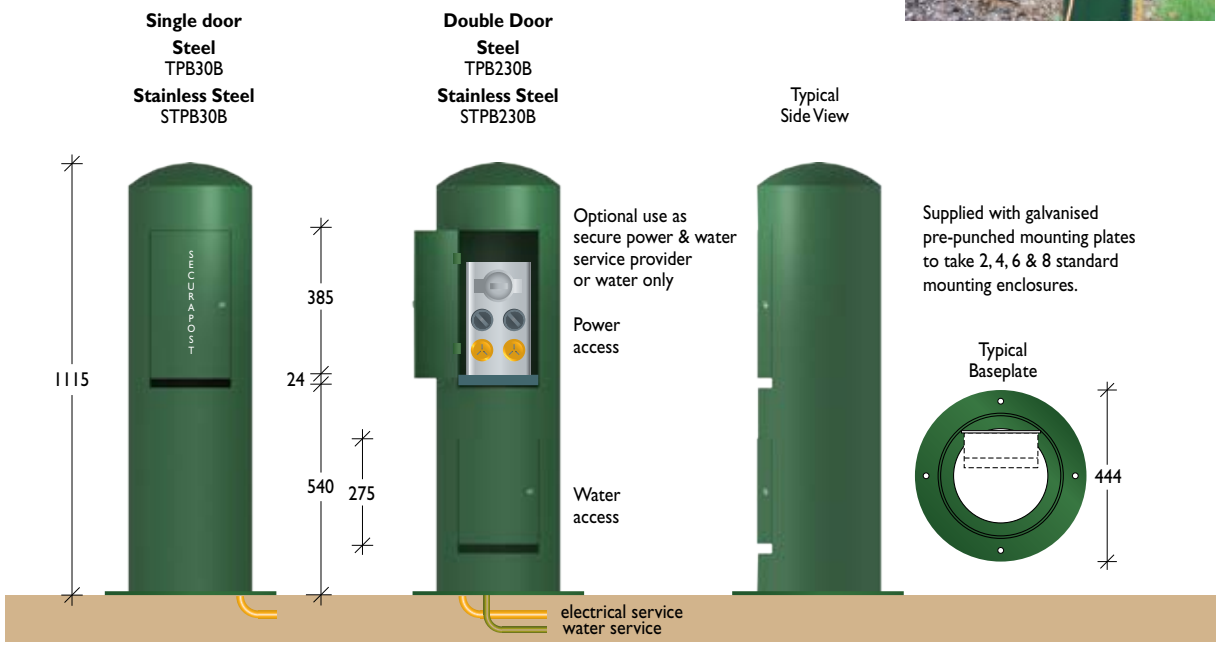

Titan 400

Material 3mm mild steel sheet / 3mm Grade 304 stainless steel sheet
Finish Galvanised / electro polished

Steel
TPB40B
Stainless Steel
STPB40B

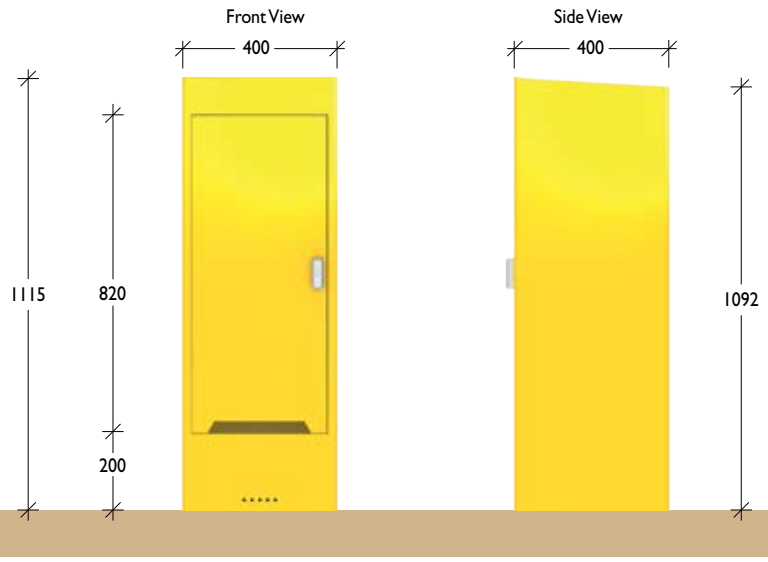

Titan 600

Material 600NB (610) x 6.35mm steel pipe/ Grade 304 stainless steel pipe
Finish Galvanised / electro polished

Steel
TPB60B
Stainless Steel
STPB60B

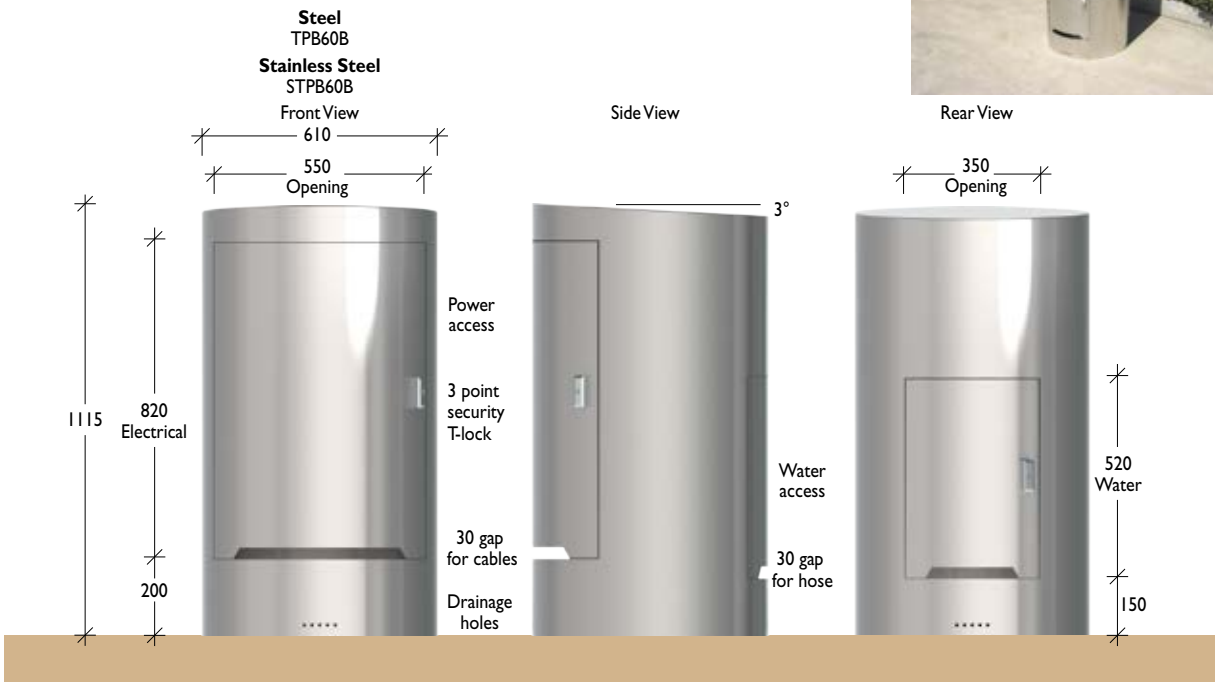

Industrial Range > Power Distribution

Titan THB Series

Hinged

Designed for use with Clipsal 56 Series switch gear. Electrical installation must be carried out by a licensed electrical contractor to comply with SAA wiring rules (AS3000) and any additional requirements of statutory authorities.

- Lockable, secure and safe
- Designed for use in remote areas
- Power and / or water outlets

THB600

Top View

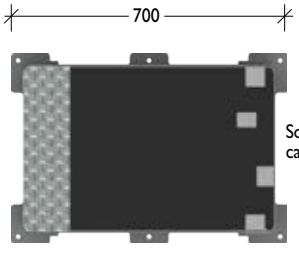

Side View

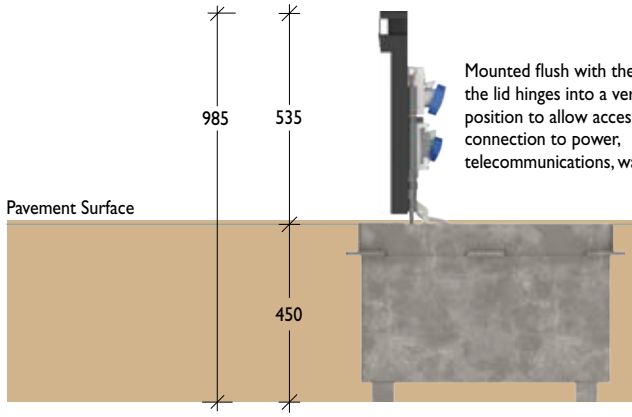

Mounted flush with the ground, the lid hinges into a vertical position to allow access and connection to power, telecommunications, water and air.

THB600

Extra heavy duty cast iron lid Load Class E400 AS 3996

Semi automatic power assist operation, using a mechanical key

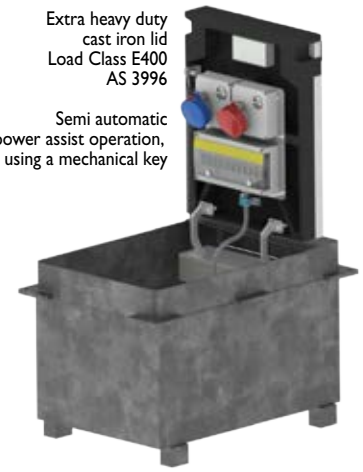

THB800

Top View

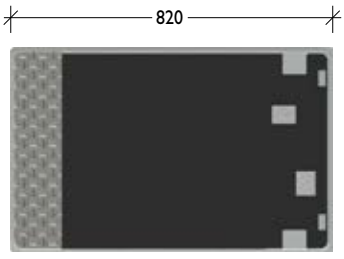

Side View

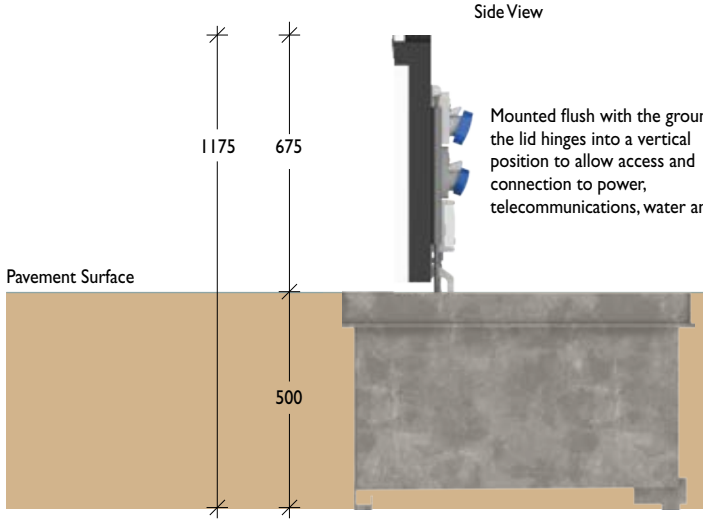

Mounted flush with the ground, the lid hinges into a vertical position to allow access and connection to power, telecommunications, water and air.

THB800

Extra heavy duty cast iron lid Load Class E400 AS 3996

Semi automatic power assist operation, using a mechanical key

Concrete infill on lid

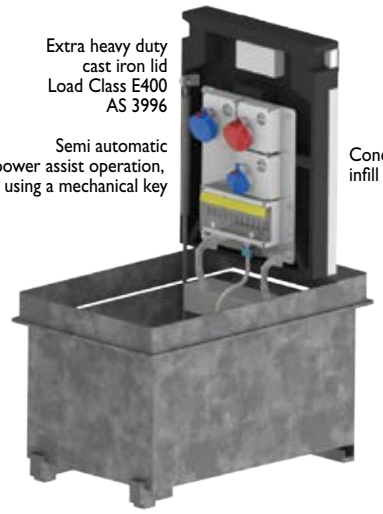

Titan TV Series
Vertical

Designed for use with Clipsal 56 Series switch gear. Electrical installation must be carried out by a licensed electrical contractor to comply with SAA wiring rules (AS3000) and any additional requirements of statutory authorities.

- Lockable, secure and safe
- Designed for use in remote areas
- Power and / or water outlets

TV300

Cast iron lid
Load Class D250
AS 3996

Semi automatic
power assist operation,
using a mechanical key

Up to 3 outlets

Accommodates
single or 3 phase power,
telecommunications,
water or air.

TV400

Retracts flush
to the pavement.

Up to 4 outlets

TV800

Up to 6 outlets

TV300
Top View

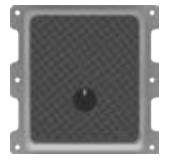

Front View

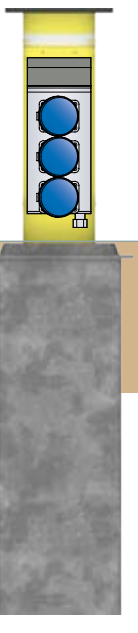

TV400
Top View

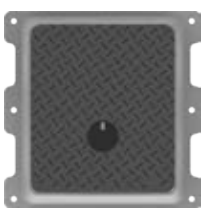

Front View

TV800
Top View

Front View

Pavement Surface

Industrial Range > Card Readers

P Series
Single

Material Upright (1100 high) 75 x 75 x 3mm heavy duty galvanised RHS
Upright (1500/2000 high) 100 x 100 x 3mm heavy duty galvanised RHS
Reader Cover. 2mm galvanised plate
Finish Electrostatically powder coated in industrial yellow

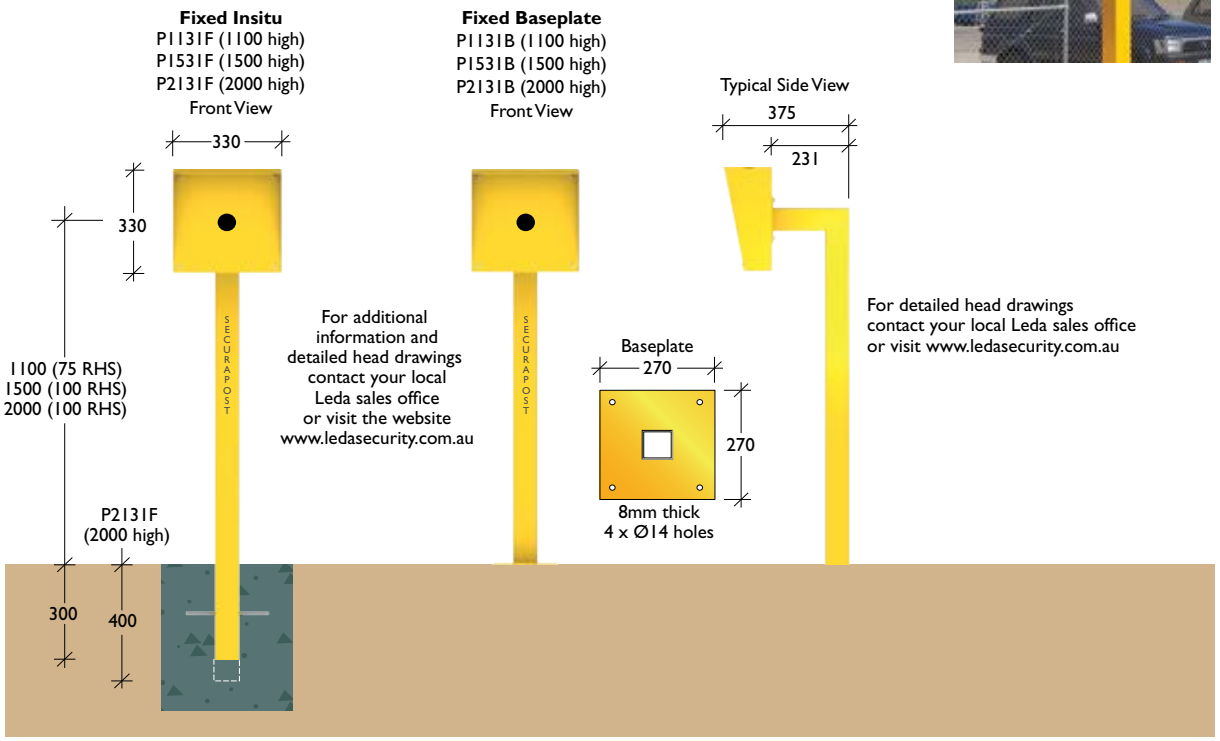

Adjustable

Material Upright. 100 x 100 x 3mm heavy duty RHS
Arm. 100 x 100 x 3mm heavy duty RHS
Finish Electrostatically powder coated in industrial yellow

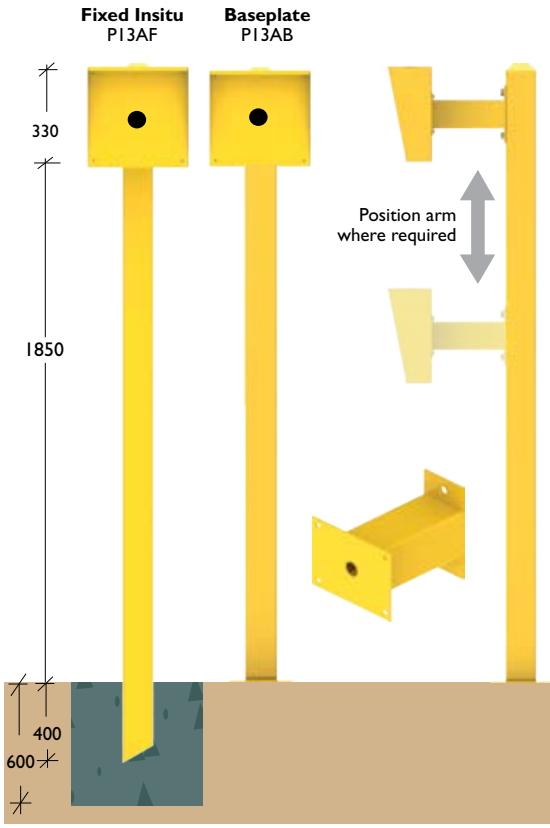

Wall Mounted

Material Upright. 100 x 100 x 3mm heavy duty galvanised RHS
Reader Cover. 2mm galvanised plate
Finish Electrostatically powder coated in industrial yellow

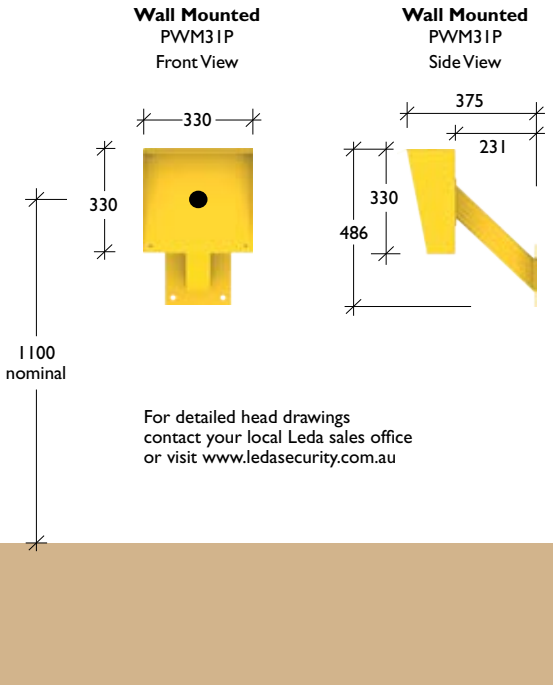

P Series
Double

Material Upright 100 x 100 x 3mm heavy duty galvanised RHS
Reader Cover. 2mm galvanised plate

Finish Electrostatically powder coated in industrial yellow

Break-away Baseplate
PDH31BB

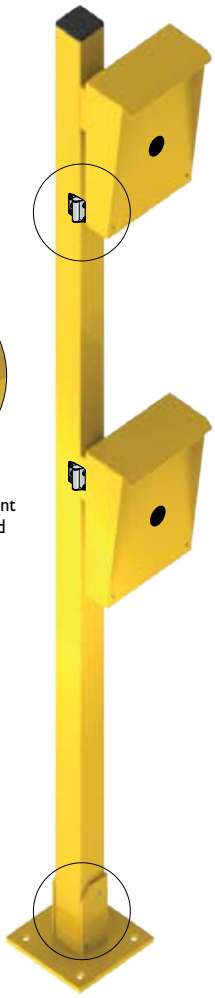

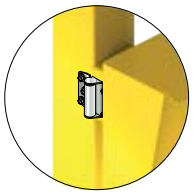

Spring-loaded
hinges to allow movement
of the card reader head
in the event of impact

Locking & Removable
PDH31LR

400mm inground sleeve
with hinged cover plate

Fixed Baseplate
PDH31B

Baseplate
270 x 270 x 8mm
4 x Ø14 holes

Fixed Insitu
PDH31F
Front View

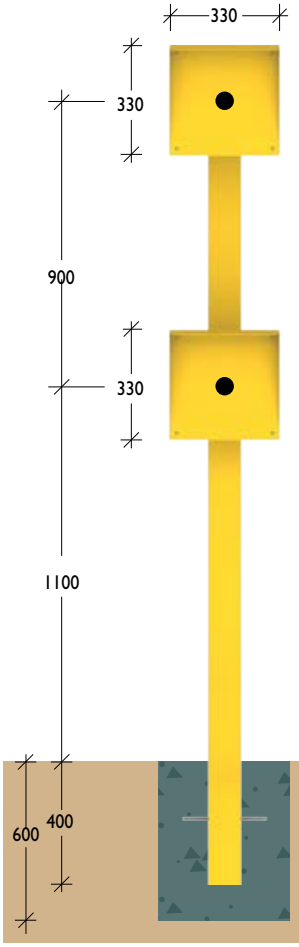

Baseplate
270 x 270 x 8mm
4 x Ø14 holes

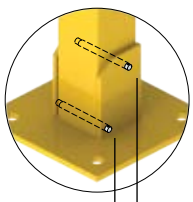

Ø12mm aluminium pin
to shear in the event of vehicle impact

Ø12mm stainless steel pivot pin
'R' clips both sides

Industrial Range > Card Readers

Card Reader
Flush Mounted

Material Upright 100 x 100 x 3mm heavy duty galvanised RHS
Reader recess . 2mm galvanised plate

Finish Electrostatically powder coated in industrial yellow

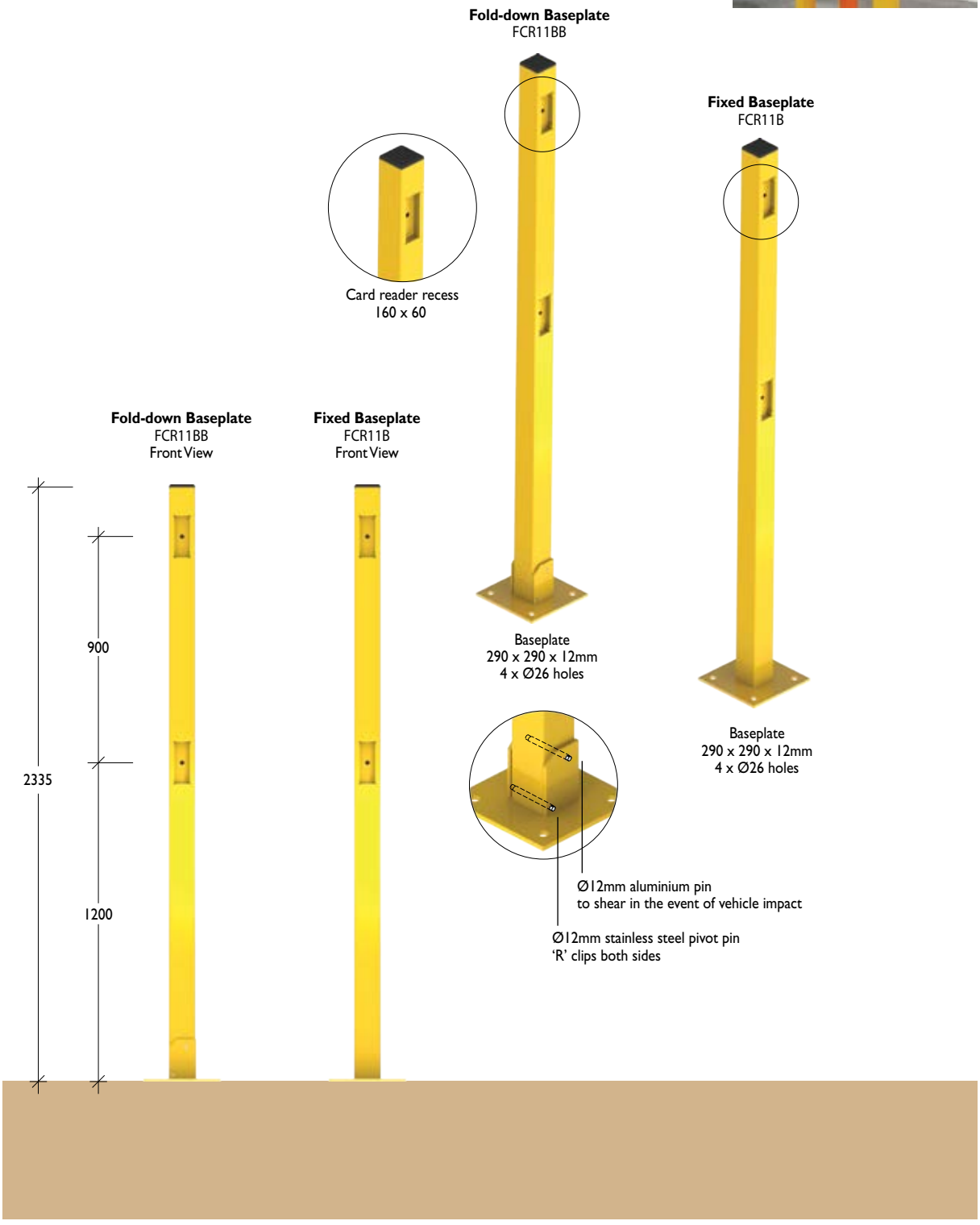

M Series
Single

Material 2mm flat sheet / 40 x 40 x 4mm angle frame
Finish Mild steel. Electrostatically powder coated in a range of colours or hot dipped galvanised
Stainless steel. Linished or electro-polished

Mild Steel
CRB500
Stainless Steel
SCRB500

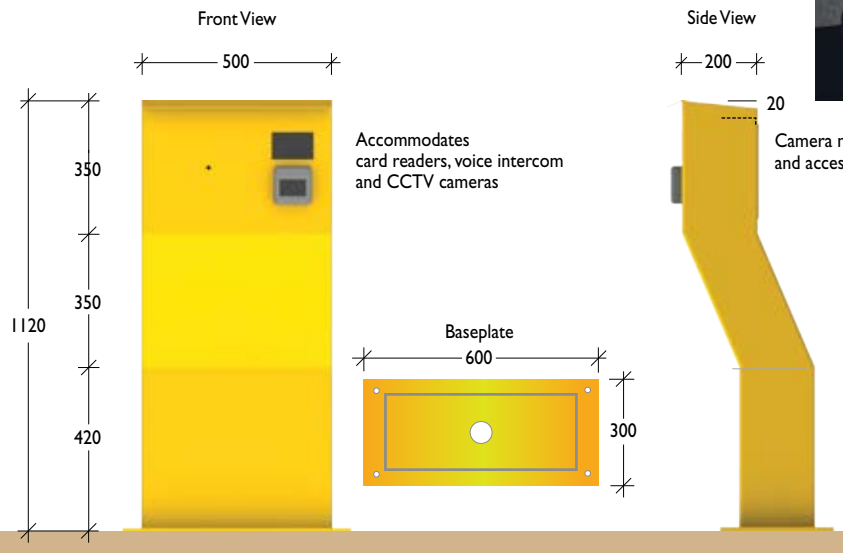

M Series
Double

Material 2mm flat sheet / 40 x 40 x 4mm angle frame
Finish Mild steel. Electrostatically powder coated in a range of colours or hot dipped galvanised
Stainless steel. Linished or electro-polished

Mild Steel
CRBDH500
Stainless Steel
SCRBDH500

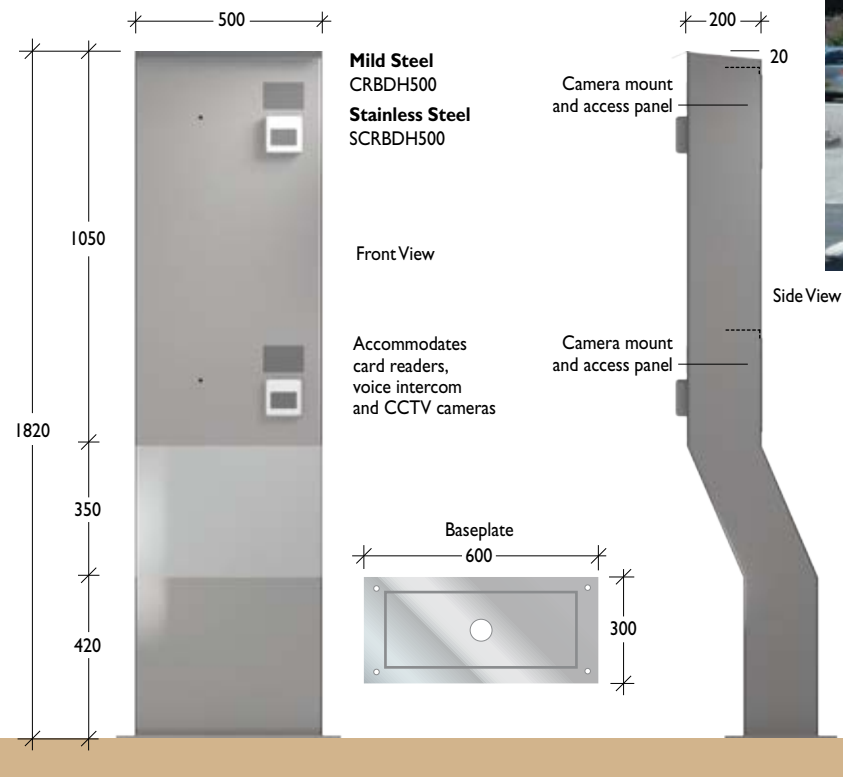

Industrial Range > Card Readers

Designer Series
Square

Material 250 x 250 x 6mm mild steel SHS
Finish Electrostatically powder coated

Mild Steel
CRBTS

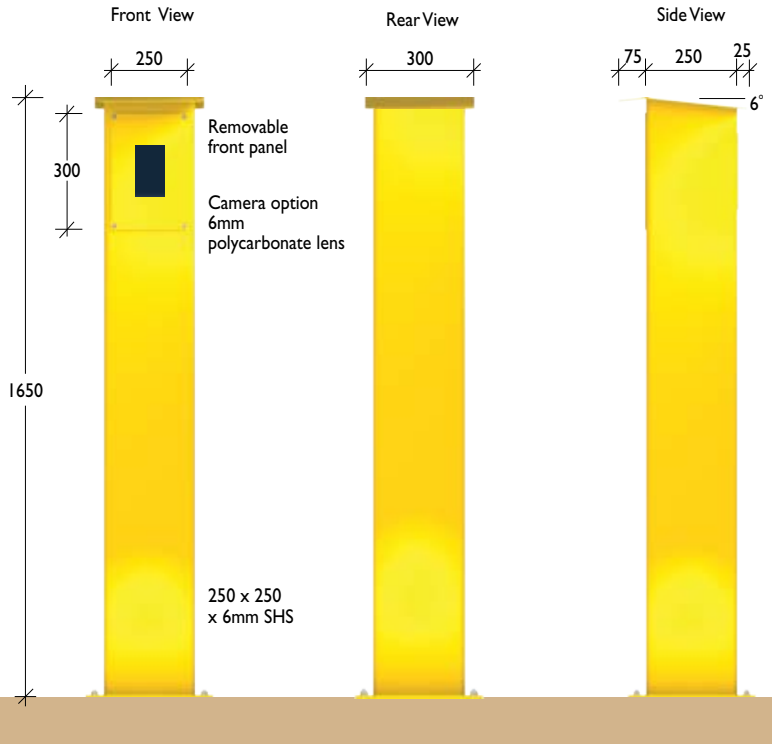

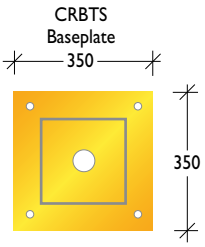

Designer Series
Rectangular

Material Galvanised steel / Grade 304 stainless steel
Finish Electrostatically powder coated /
Linished or electro-polished

Mild Steel CRB216B **Stainless Steel** SCRB216B

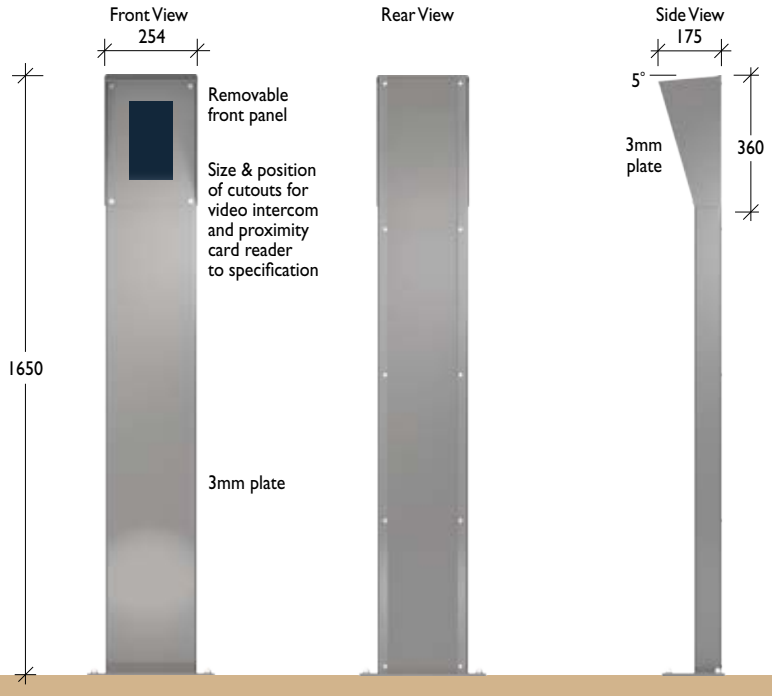

Designer Series
Square Slant

Material Grade 304 stainless steel RHS
Finish Linished or electro-polished

Holes on faceplate are lasercut to suit customer's electronic equipment, or supplied blank for customer to cut their own holes to suit

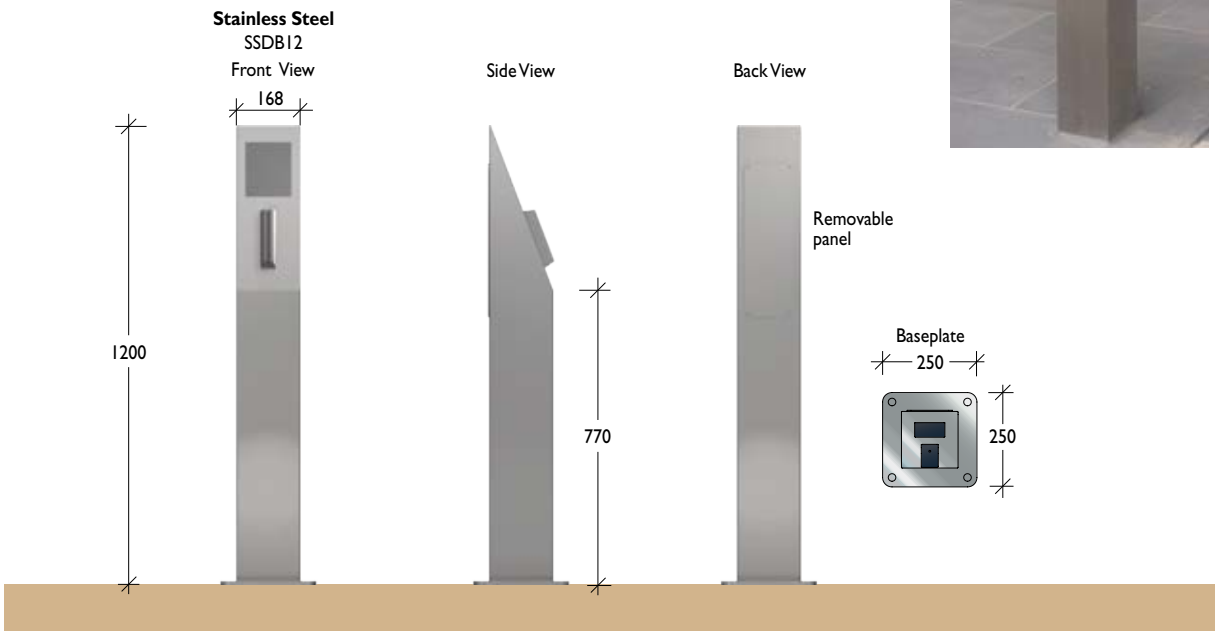

Designer Series
Regal

Material Grade 304 150NB (168.3) x 3.40 stainless steel pipe
Finish Linished or electro-polished

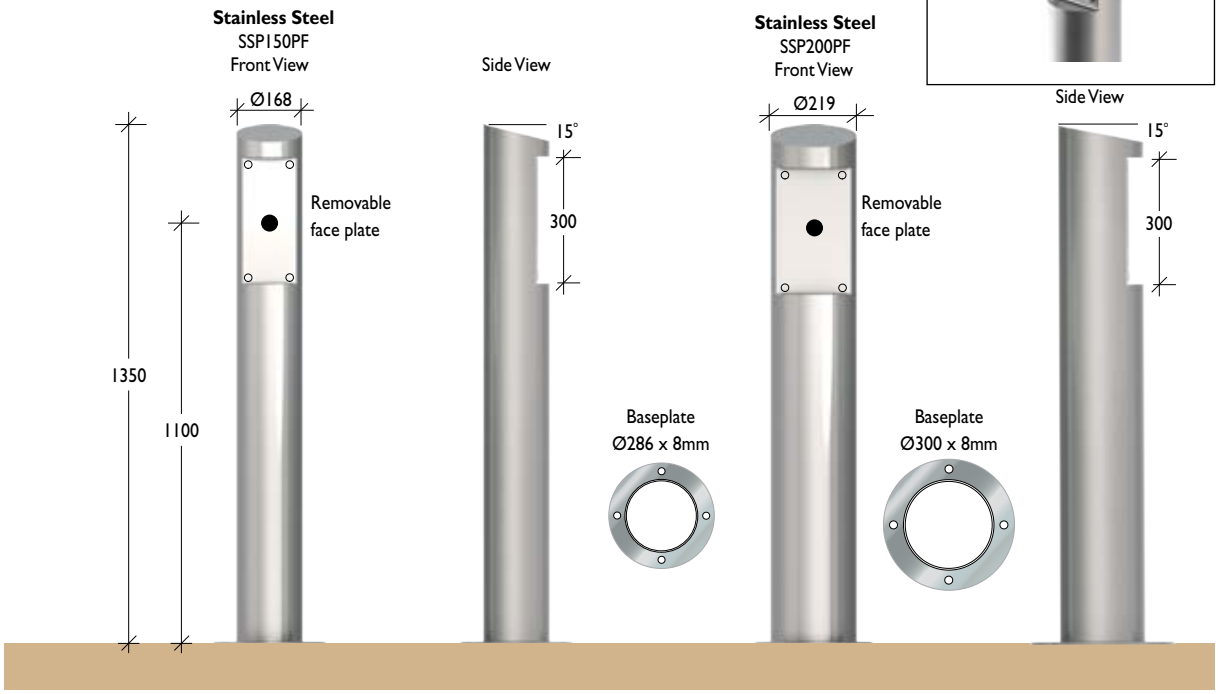

Sign Bollards

Material 150NB (168.3) x 3.40mm Grade 304 stainless steel pipe
Finish Linished or electro-polished

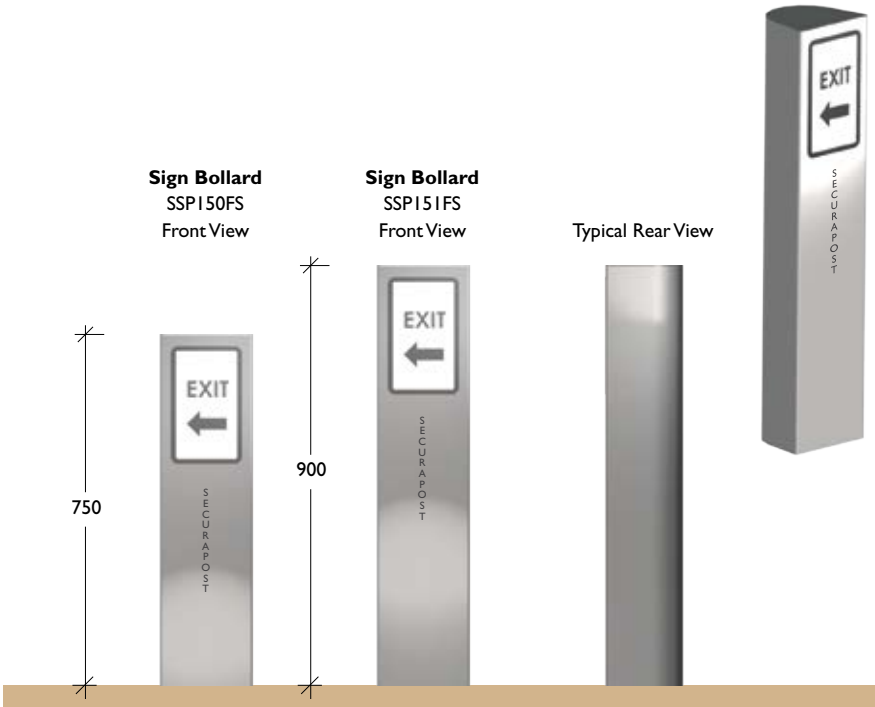

Smokers Bollards

Material Butt Bin. 90NB (101.6) x 2.11mm Grade 304 Stainless Steel Pipe
Bollard. 150NB (168.3) x 3.40mm Grade 304 Stainless Steel Pipe
Finish Linished or electro-polished

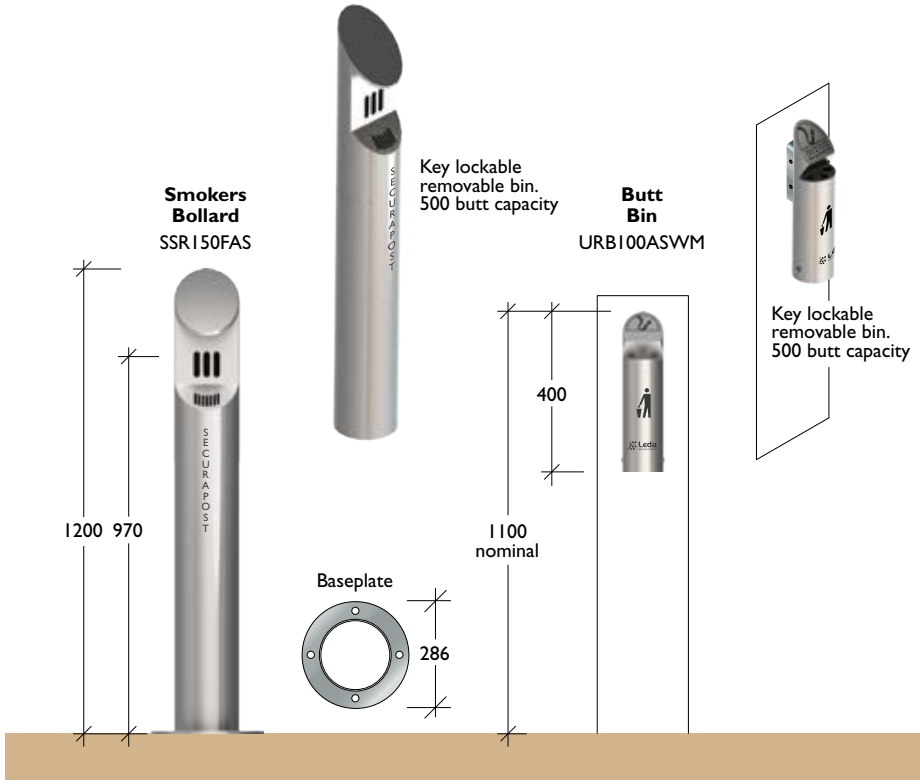

Receiving Post
Suit Boom Gates

Material 65 x 65 x 3mm / 75 x 75 x 3mm RHS
Finish Hot dipped galvanised or
electrostatically powder coated in a range of colours

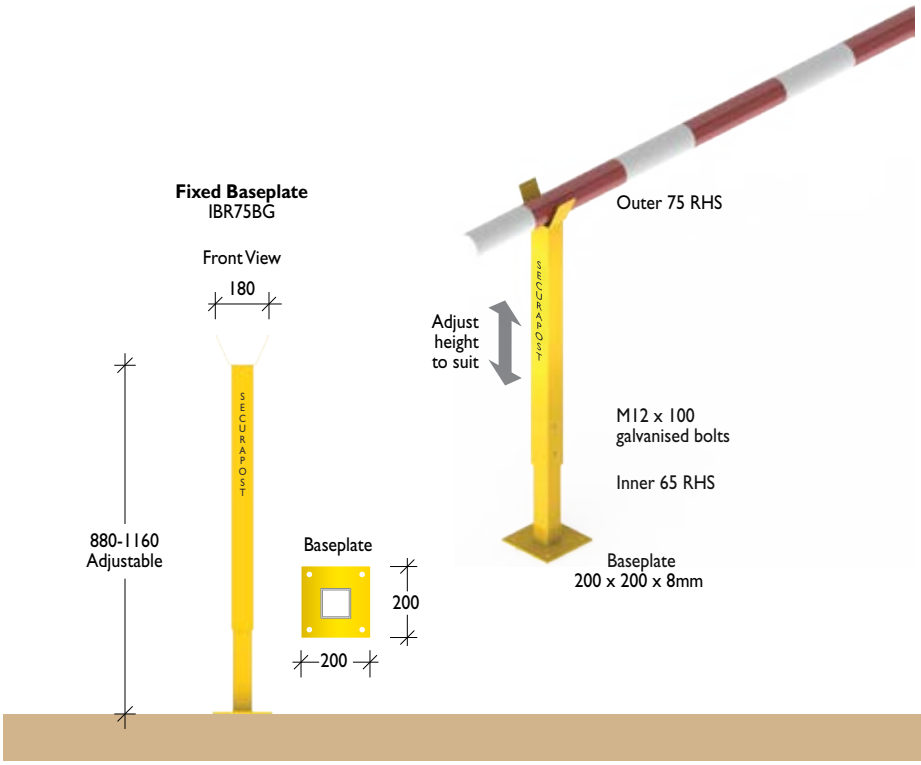

Corner Guards

Material Galvanised mild steel angle, with countersunk fixing holes
Finish Hot dipped galvanised or
electrostatically powder coated in a range of colours

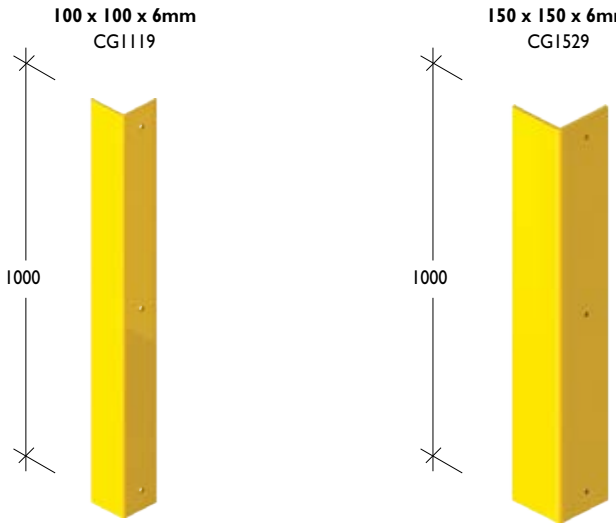

Wheel Stops
Pre-cast Concrete

30MPa concrete
Conforming to AS2890.1 – 2004

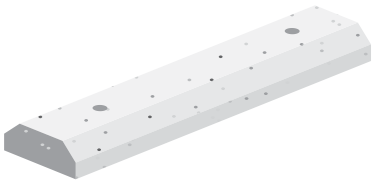

WS16

WS20

Wheel Stops
Rubber

100% Recycled Rubber
Car Stops

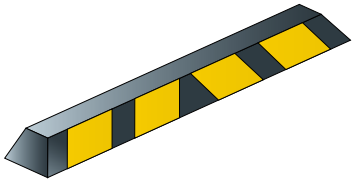

WSR16

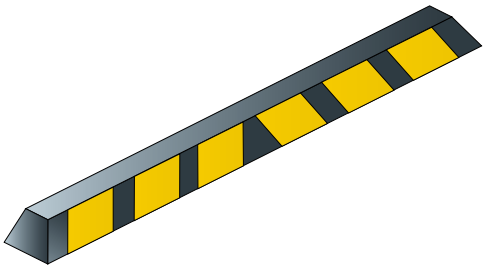

WSR20

Product code	Material	Type	Length (mm)	Width (mm)	Height	Weight (kg)
WS16	Pre-cast	Car Stop	1650	190	90	57
WS20		Car Stop	2000	190	90	70
WSR16	Rubber	Car Stop	1650	160	100	19
WSR20		Car Stop	2000	160	100	22

Options & Accessories

Product Description					Code
Chain Eyes	Screw in				CEPS
	Weld on				CEPW
Wings	Medium duty 20NB galvanised pipe For use with most bollards		Suit	Range	S45W
Personalised Tops	Epoxy attach names & logos				LOGOSTP
	Bronze inserts				LOGO
Polished Head Option	Aluminium, Ambassador style Aluminium, Parisian style Aluminium, Commodore style *Available as an option, heads not sold separately.*		Suit	150NB 80NB 80NB	POLALUMA POLALUMP POLALUMC
Louvres	For use with Lighting Bollards		Suit	150NB	LOUVRE
Chains	Galvanised, per metre			6mm 8mm	CH6 CH8
D Shackles	Galvanised			8mm	DSHACKLE
Masonry Anchors	Steel	8 x 80mm			MA8
		10 x 100mm			MA10
		12 x 100mm			MA12
	Galvanised Steel	6 x 75mm			GMA6
		8 x 80mm			GMA8
		10 x 100mm			GMA10
		12 x 100mm			GMA12
	Stainless Steel	10 x 100mm			SMA10
		12 x 100mm			SMA12
Chemset Anchors	Steel	6 x 80mm	Set of 4		SMA6
		12 x 190mm	Set of 4		MA12CA
		16 x 260mm	Set of 4		MA16CA
		20 x 260mm	Set of 4		MA20CA
	Stainless Steel	12 x 140mm	Set of 4		SMA12CA
Dome Nuts	Stainless Steel	12mm	Set of 4		SDN1

Options & Accessories

Product Description					Code
Storage Sleeves for L&R Bollards	Round	Single bollard storage	Suit	80NB	SS1
				125NB	SS1125
				150NB	SS1150
		Double bollard storage		80NB	SS2
				125NB	SS2125
				150NB	SS2150
	Square	Single bollard storage		100 x 100	SS111
				150 x 150	SS211R
		Double bollard storage		100 x 150	SS2215R
Storage Sleeves for Warden Bollards	Base only with 4 masonry anchors			Warden	WSB22
Hanging Racks	1, 2, 3 or 4 L&R bollards		Suit	1 bollard	WH1
				2 bollard	WH2
				3 bollard	WH3
				4 bollard	WH4
Cover Plates & Lifting Handles	Round	Mild steel, drop-in	Suit	80NB	CP80
		Mild steel, drop-in, h/ duty		80NB	XHC1001
		Mild steel, h/ duty (Suit Office Works bollards)		80NB	XHC1001OW
		Mild steel, drop-in		125NB	CP125
				150NB	CP150
		Stainless steel, hinged		80NB	SSCP80
				125NB	SSCP125
				150NB	SSCP150
		Cover plate lifting handle			LT1001
Hinged Cover Plates	Round	Stainless steel cover, gal steel sleeve	Suit	80NB	SHCP80
		Removable cover		80NB	SHCP80R
		Heavy duty		80NB	SHCP80H
				125NB	SHCP125
		For 'C' wall m/s & alum bollards		150NB	SHCP150B
		For 'C' wall m/s & alum bollards, h/ duty		150NB	SHCP150BH
	Square	Stainless steel cover, gal steel sleeve		100 x 100	SHCP11
				100 x 150	SHCP15
				150 x 150	SHCP55
Cast-in Sleeves	Round	Mild steel	Suit	80NB	SL80R
				125NB	SL125RB
		Mild steel, suit m/steel & aluminium		150NB	SL150RA
		Mild steel, suit stainless steel		150NB	SL150RB
	Square	Stainless steel, suit stainless steel		100 x 100	SL11R
				100 x 150	SL1015R
				150 x 150	SL1515R
O Rings	Neoprene rubber (Protects concrete and prevents the ingress of dirt and leaves)		Suit	80NB	OR80
				125NB	OR125
				150NB	OR150

Options & Accessories

Product Description			Code
Locking Options	Keying Alike (Up to 50 L&R bollards)		KAP
	Master Keying using standard cam lock (per bollard)		KAP2
	Master Keying for BiLock® or similar		KAP3
	Additional Keys		KEP
	Double Locking (Available for most L&R bollards)		DKE
	Alternative Locking (eg. BiLock® high security)		BILOCK
	Extended length key barrier infill bollards		LS14762
	E lock & key (NSW Dept of Education)		ELOCK
	Cam Lock Standard for L &R Bollard – 90° movement		LOCK
	Cam Lock for L &R Bollard – 180° movement		LOCK001
	Fire Brigade Cam lock for L&R Bollard – 180°		LOCK003
	Internal locking mechanism L&R Bollard		LS10207A
	Alter internal locking mechanism L&R Bollard – 180°		KBL180A
	New internal locking mechanism L&R Bollard – 180°		KBL180B
Door Cables	Cable door assembly (including cable), suit 80NB		WCD50
	For use with locking & removable bollards on roller doors		
	Fitting of roller shutter cable WCD50		IWCD50
Reflective Tape	50mm horizontal (for circular bollards) Red, Yellow, White, Black, Red & White stripe		RTH50
	Yellow vertical strip 50 x 500mm long		RTV50
	200mm x 47m roll Red, Yellow, White, Black, Red & White stripe		RTV200
Traffic Lights	Slimline 150NB (For use with retractable bollards and other automated barriers)	3.40mm wall	SSP150TA
		7.11mm wall	SSP150TB
		10.97mm wall	SSP150TC
Baseplate Skirt	Stainless steel (For use with baseplate bollards)	Suit 80NB	SSCP80B
		125NB	SSCP125B
		150NB	SSCP150B
	For use with gusseted baseplate bollards	125NB	SSDCP125

Standard 180° Extended Fire Brigade Master Keying

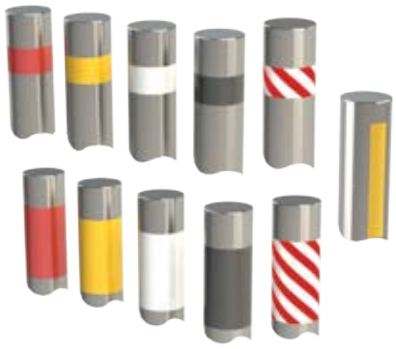

Options & Accessories

Product Description			Code
Bollard Lifters	Manual double handle (2 man)	Suit up to 150NB	BL150A
	Mechanical, up to 120kg (with clamps)	150NB	LT120
	Mechanical, up tp 300kg	300NB	LT300A
LT120 LT300A			
BL150A			
Lifting Handles & Keys	For manual retractable bollards	Suit 80-150NB	MRBLHT
		80-150NB	MRBLHB
		150NB	MRBGSK
MRBLHB MRBLHT MRBGSK			
Retractable Bollard Option	ARB control cabinet, basic design, with compressor 60 litre reservoir, control valves & logic controller		ARBCC
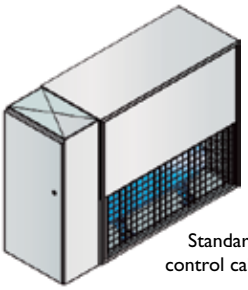 Standard control cabinet	ARB control cabinet, advanced options 60 litre reservoir, control valves & logic controller		ARBCC2
	Round sump with removable lid		ISUMP
	Electric sump pump (24V) and plumbing fittings		UPUMP
	Pneumatic locks for ARB Bollards		PNLK
	Air reservoir 147 litres		RESV147
	Air reservoir 316 litres		RECV316
	Installation Jig (RHS frame with in-built leveling for easy positioning and plumbing of bollards)		ARBJIG
Timber Bollard Options	Cap, s/steel for round timber bollard		LS10271
	Girth strap, s/steel for round timber bollard		LS10272
	Cap, s/steel for square timber bollard		LS10267
	Girth strap, s/steel for square timber bollard		LS10268
Export	Timber or steel crate, made to suit		CRATE
	Export documentation		DOCS

Product Description		Code
Powder Coating		
	Powder coat – standard colours	PCF
	(Yellow, Black, White, Red, Grey, Green)	
	Powder coat – non-standard Colours	PCFSP
	Powder coat 65NB builders bollard	PC65
	Powder coat 80NB builders bollard	PC80
	Powder coat 100NB builders bollard	PC100
	Powder coat 125NB builders bollard	PC125
	Powder coat 150NB builders bollard	PC150
	Powder coat 200NB builders bollard	PC200
	Powder coat 300NB builders bollard	PC300
	Wet spray -150NB bollard (2 part epoxy)	WET150
Electropolishing		
	Electopolish 80NB s/steel bollard	SEP80
	Electropolish 100NB s/steel bollard	SEP100
	Electropolish 125NB s/steel bollard	SEP125
	Electropolish 150NB s/steel bollard	SEP150
Hot Dip Galvanising		
	Hot dip galvanise 65NB bollard	GAL65
	Hot dip galvanise 80NB bollard	GAL80
	Hot dip galvanise 100NB bollard	GAL100
	Hot dip galvanise 125NB bollard	GAL125
	Hot dip galvanise 150NB bollard	GAL150
	Hot dip galvanise 200NB bollard incl Titan	GAL200
	Hot dip galvanise 300NB bollard incl Titan	GAL300
Cleaning	Stainless steel cleaner pack	SSCLEANER
Protection	Corrosive protection coating for metal surfaces	MCPC01

Options & Accessories > Installation

Product Description		Code
Design Setup	Travel cost per hour outside metro areas	TRAVEL1
	Worksite establishment metro areas	ISITE2
Engineering	Design engineer for design & working drawings	IDESIGN
	Civil engineer for consulting services	IDESIGN2
Detection	Dial a dig service	IDIALADIG
	Ground penetrating radar survey	IXRAY
	Cable detection survey	ICABDETECT
	Exploratory 10mm pilot hole to intended bollard depth	IPILOT
Core Drilling	As a general guide, use bollard OD + 2mm.	
	Most bollards can be installed with OD core sizes of 92 & 171mm.	
	Core drill 78mm, suit fixed bollards 65NB	ICD61
	Core drill 92mm, suit fixed bollards 80NB	ICD81
	Core drill 104mm, suit fixed bollards 100NB	ICD101
	Core drill 152mm, suit fixed bollards 125NB	ICD141
	Core drill 167mm, suit fixed bollards 150NB in steel or alum	ICD151A
	Core drill 171mm, suit fixed bollards 150NB in stainless	ICD151B
	Core drill 254mm, suit fixed bollards 200NB	ICD251
	Core drill 304mm, suit fixed bollards 300NB	ICD301
Epoxy Fixed Bollards	Two part epoxy for small gaps such as Megapoxy 69	
	or Nitomortar AP (Parchem).	
	Use in accordance with manufacturer's specifications.	
	Epoxy fix 80NB bollard into hole	IE80
	Epoxy fix 150NB bollard into hole	IE150
	Epoxy fix 200NB bollard into hole	IE200
Core Drill and Grout	(Removable bollard sleeves or fixed bollards)	
	High strength non-shrink grout for larger gaps.	
	Proprietary brands such as Durabed 702 (Lanko),	
	Conbextra C (Parchem), SikaGrout-212HP.	
	Use in accordance with manufacturer's specifications.	
	Core drill 104mm, grout in sleeve. 80NB sleeve SL80R	IDG101
	Core drill 201mm	ICD207
	Core drill 167mm, grout in sleeve. 80NB sleeve SHCP80	IDG151
	Core drill 254mm, grout in sleeve 150NB SL150R, SHCP150	IDG251
	Core drill 275mm	ICD271
Storage Sleeves	Install storage sleeves	INSTS
Baseplate Bollard	Install baseplate bollard	IBP1

Product Description		Code
Concrete Footings		
Strip Footings	Excavation, reinforcement and concrete	
	400 x 400mm	ISF1
	600 x 600mm	ISF2
	750 x 750mm	ISF3
	900 x 900mm	ISF4
	900 x 1500mm	ISF5
Suspended Slabs	Type A 350 x 350 x 10mm base plate (incl masonry anchors)	SSBP1
	Type B 350 x 350 x 10mm base plate & gussets (incl anchors)	SSBP2
	Type C Double sandwich base plate (incl masonry anchors)	SSBP3
	Steel sleeve & s/steel sprung lid, suit 80NB bollard	SHCP80
	Steel sleeve & s/steel H/D cover plate, suit 80NB bollard	SHCP80H
	Shallow steel sleeve & 5mm cover plate, suit 80NB bollard	SHCP80S
	Steel sleeve for underside of slab, suit 125NB bollard	SL125WE
Stand Alone Footings	400 x 400 x 400mm deep (individual bollard)	ICF
Concrete Infill	Concrete infill 80NB Bollard	INFIL90
	Concrete infill 150NB Bollard	INFIL150
Barrier Mix Infill	Anti-cut Barrier mix for 80NB Bollard	LBM150B
	Anti-cut Barrier mix for 125NB Bollard incl steel cruciform	LBM125B
	Anti-cut Barrier mix for 150NB Bollard incl steel cruciform	LBM150B
	Anti-cut Barrier mix for 200NB Bollard incl steel cruciform	LBM200B
Shallow Mount Bollards	Shallow mount footing assembly incl reinforcment, 2.5 tonne	SMF1425
	Shallow mount footing assembly incl reinforcment, 3.5 tonne	SMF1435
	Install SMF1425 shallow mount footing assembly	ISMF1425
	Install SMF1435 shallow mount footing assembly	ISMF1435
	Install 150NB ATM bollard incl core drilling & pilot hole	IATM150
	Install 150NB ATM bollard sleeve incl core drill & pilot	IATM150HC
	Install 150NB ATM bollard in susp. slab incl core drill & pilot	IATM150TS
Miscellaneous	Barricade Hire – per day	IBARHIRE
	Daymaker Lighting – per day	IDAYMAKER
	Dial a dig – service fee	IDIALADIG
	Skip bin hire – per m^3 including delivery & pick up	IEX
	Generator hire – per day	IGENHIRE
	Parking fee charges for service & installation vehicles – per day	IPARKING
	Concrete sawing to 50mm/per linear metre	ISAW1
	Clean up / wet vacuum hire	IWETVAC
	Excavate rubbish (plus tip fee) per m^3	IEX

Product Code Index

Product Code	Product Group	Description	PAGE
AA150B	Aluminium	Ambassador 150NB Baseplate	30
AA150F	Aluminium	Ambassador 150NB Fixed	30
AA150R	Aluminium	Ambassador 150NB L&R	30
AAE150B	Aluminium	Aegis 150NB Baseplate	31
AAE150F	Aluminium	Aegis 150NB Fixed	31
AAE150R	Aluminium	Aegis 150NB L&R	31
AC100B	Aluminium	Commodore 80NB Baseplate	29
AC100F	Aluminium	Commodore 80NB Fixed	29
AC100R	Aluminium	Commodore 80NB L&R	29
AE150BA	Steel	Aegis 150NB Baseplate	45
AE150FA	Steel	Aegis 150NB Fixed	45
AE150FB	Steel	Aegis 150NB Fixed	45
AE150RA	Steel	Aegis 150NB L&R	45
AE150RB	Steel	Aegis 150NB L&R	45
AM95F	Steel	Major 80NB Fixed	44
AM95R	Steel	Major 80NB L&R	44
AP100B	Aluminium	Parisian Round 80NB Baseplate	29
AP100F	Aluminium	Parisian Round 80NB Fixed	29
AP100R	Aluminium	Parisian Round 80NB L&R	29
APS100B	Aluminium	Parisian Square 80NB Baseplate	29
APS100F	Aluminium	Parisian Square 80NB Fixed	29
APS100R	Aluminium	Parisian Square 80NB L&R	29
ARB150A	Retractable	HVM Automatic Pneumatic 150NB	106
ARB150B	Retractable	HVM Automatic Pneumatic 150NB	106
ARB150C	Retractable	HVM Automatic Pneumatic 150NB	106
ARB200A	Retractable	HVM Automatic Pneumatic 200NB	106
ARB200B	Retractable	HVM Automatic Pneumatic 200NB	106
ARB200C	Retractable	HVM Automatic Pneumatic 200NB	106
ASL110BSOL	Lighting	Solar Baseplate	60
ASL110FSOL	Lighting	Solar Fixed	60
ATM100B	ATM Protection	100 x 100 Barrier	81
ATM65B	ATM Protection	65NB Barrier	81
ATM804R	ATM Protection	80NB Barrier	81
ATM80B	ATM Protection	80NB Barrier	81
ATMSB975F	ATM Protection	125NB Barrier	81
AV97B	Aluminium	Victorian Baseplate	30
AV97F	Aluminium	Victorian Fixed	30
AV97R	Aluminium	Victorian L&R	30
BB80B	Industrial	Builders Bollard 80NB Baseplate	120
BB80F	Industrial	Builders Bollard 80NB Fixed	120
BB80P	Industrial	Builders Bollard 80NB L&R	121
BB80R	Industrial	Builders Bollard 80NB Retractable	121
BB100B	Industrial	Builders Bollard 100NB Baseplate	120
BB100F	Industrial	Builders Bollard 100NB Fixed	120
BB125B	Industrial	Builders Bollard 125NB Baseplate	120
BB125F	Industrial	Builders Bollard 125NB Fixed	120
BB150B	Industrial	Builders Bollard 150NB Baseplate	120
BB150F	Industrial	Builders Bollard 150NB Fixed	120
BB150P	Industrial	Builders Bollard 150NB L&R	121
BB150R	Industrial	Builders Bollard 150NB Retractable	121
BCC01B	Stainless Steel	Brisbane City Council 125NB Baseplate	23
BLBOL	Pre-cast Concrete	Colossus 80NB Spherical with Flat Base	40
BUZZ	Retractable	Warning Buzzer	111
C05/10/15/20/25	Retractable	Cable with connector in metres	111
CA820/CA825	Retractable	Foundation Box	111
CG1119	Industrial	Corner Guards	135
CG1529	Industrial	Corner Guards	135
CP1S	Retractable	Control Cabinet	111
CP2S	Retractable	Control Cabinet	111
CP4S	Retractable	Control Cabinet	111
CP1SK	Retractable	Control Cabinet	111
CP2SK	Retractable	Control Cabinet	111
CP4SK	Retractable	Control Cabinet	111
CRB216B	Card Reader	Designer Series Rectangular Baseplate	132
CRB500	Card Reader	M Series Single	131
CRBDH500	Card Reader	M Series Double	131
CRBTS	Card Reader	Designer Series Square Baseplate	132
DH200	Retractable	VAC 200NB Hydraulic	109
DH250	Retractable	VAC 250NB Hydraulic	109
DM114	Retractable	VAC 100NB Manual Retractable	108
DP168	Retractable	VAC Ø168 Automatic Pneumatic	109
DP220	Retractable	VAC Ø220 Automatic Pneumatic	109
DSA114	Retractable	VAC 100NB Semi Automatic	108
DSA168	Retractable	VAC 150NB Semi Automatic	108
DSA220	Retractable	VAC 200NB Semi Automatic	108
ERB820A	Retractable	Ø200 Electromechanical Retractable	110
ERB825A	Retractable	Ø254 Electromechanical Retractable	110
ERB825C	Security	Ø254 Electromechanical Retractable	97
FAL150B2	Lighting	Slimline 150NB Slotted 180_ Baseplate	58
FAL150B3	Lighting	Slimline 150NB Slotted 360_ Baseplate	58
FAL150B4	Lighting	Slimline 150NB Square 180_ Baseplate	58
FAL150B5	Lighting	Slimline 150NB Square 360_ Baseplate	58
FAL150F2	Lighting	Slimline 150NB Slotted 180_ Fixed	58
FAL150F3	Lighting	Slimline 150NB Slotted 360_ Fixed	58
FAL150F4	Lighting	Slimline 150NB Square 180_ Fixed	58
FAL150F5	Lighting	Slimline 150NB Square 360_ Fixed	58
FAL80B2	Lighting	Slimline 80NB Slotted 180_ Baseplate	59
FAL80B3	Lighting	Slimline 80NB Slotted 360_ Baseplate	59
FAL80F2	Lighting	Slimline 80NB Slotted 180_ Fixed	59
FAL80F3	Lighting	Slimline 80NB Slotted 360_ Fixed	59
FCR11B	Card Reader	Flush Mounted Baseplate	130
FCR11BB	Card Reader	Flush Mounted Fold-down Baseplate	130

Product Code Index

Product Code	Product Group	Description	PAGE
FDB75B	Steel	Guardsman Fold Down	46
FDB90B	Steel	Guardsman 65NB Fold Down	46
FS150B2	Lighting	Slimline 150NB Slotted 180_ Baseplate	58
FS150B3	Lighting	Slimline 150NB Slotted 360_ Baseplate	58
FS150B4	Lighting	Slimline 150NB Square 180_ Baseplate	58
FS150B5	Lighting	Slimline 150NB Square 360_ Baseplate	58
FS150F2	Lighting	Slimline 150NB Slotted 180_ Fixed	58
FS150F3	Lighting	Slimline 150NB Slotted 360_ Fixed	58
FS150F4	Lighting	Slimline 150NB Square 180_ Fixed	58
FS150F5	Lighting	Slimline 150NB Square 360_ Fixed	58
HIG80FCAL	Industrial	Caltex 80NB Fixed	119
HIG150RB	Security	HD Industrial 150NB Removable	84
HIG150RC	Security	HD Industrial 150NB Removable	84
HIG200RB	Security	HD Industrial 200NB Removable	84
HIG200RC	Security	HD Industrial 200NB Removable	84
HIG80RCAL	Industrial	Caltex 80NB L&R	119
HIG150RCAL	Industrial	Caltex 150NB Removable	119
IBR100B	Industrial	Round 100NB Baseplate	115
IBR100FA	Industrial	Round 100NB Fixed	114
IBR125B	Industrial	Round 125NB Baseplate	115
IBR125FA	Industrial	Round 125NB Fixed	114
IBR150B	Industrial	Round 150NB Baseplate	115
IBR150FA	Industrial	Round 150NB Fixed	114
IBR150FSC	Security	Barrier Infill 150NB Fixed	87
IBR150RSC	Security	Barrier Infill 150NB L&R	87
IBR200B	Industrial	Round 200NB Baseplate	115
IBR200FA	Industrial	Round 200NB Fixed	114
IBR200FB68A	Security PAS68	Static IBR 200NB Fixed	89
IBR200FB68B	Security PAS68	Static IBR 200NB Fixed	89
IBR200FSC	Security	Barrier Infill 200NB Fixed	87
IBR200RSC	Security	Barrier Infill 200NB L&R	87
IBR250FB68A	Security PAS68	Static IBR 250NB Fixed	89
IBR250FB68B	Security PAS68	Static IBR 250NB Fixed	89
IBR300B	Industrial	Round 300NB Baseplate	115
IBR300FA	Industrial	Round 300NB Fixed	114
IBR75BG	Industrial	Receiving Post Baseplate	135
IBR80B	Industrial	Round 80NB Baseplate	115
IBR80FA	Industrial	Round 80NB Fixed	114
IBS100B	Industrial	Square 100 x 100 Baseplate	116
IBS250F	Security	HD Industrial 250 SHS Fixed	84
IBS100FA	Industrial	Square 100 x 100 Fixed	116
IBS100RA	Industrial	Square 100 x 100 L&R	116
IBS150B	Industrial	Square 150 x 150 Baseplate	116
IBS150FA	Industrial	Square 150 x 150 Fixed	116
IBS250BB	Security	HD Industrial 250 SHS Baseplate	84
IBS250FB	Security	HD Industrial 250 SHS Fixed	84
IRB150FB	Security	IRB Series 150NB Fixed	82
IRB150FC	Security	IRB Series 150NB Fixed	82
IRB200FB	Security	IRB Series 200NB Fixed	82
IRB200FC	Security	IRB Series 200NB Fixed	82
IRB300FB	Security	IRB Series 300NB Fixed	82
IRB300FC	Security	IRB Series 300NB Fixed	82
IRPI200B	Stainless Steel	Flexible Base Plate	51
JSR150B	Stainless Steel	Screen Round Baseplate	26
JSR150LA	Lighting	Screen Round Half Fixed	59
JSR150LB	Lighting	Screen Round Full Fixed	59
JSS150B	Stainless Steel	Screen Square Baseplate	26
JSS150LA	Lighting	Screen Square Half Fixed	59
JSS150LB	Lighting	Screen Sqaure Full Fixed	59
KTOOLS	Retractable	Installation Tools	111
LS10267	Timber	Hardwood Square Cap	34
LS10268	Timber	Hardwood Square Strap	34
LS10271	Timber	Hardwood Round Cap	34
LS10272	Timber	Hardwood Round Strap	34
MRB150A	Retractable	HVM Manual 150NB Lifting Handle	104
MRB150B	Retractable	HVM Manual 150NB Lifting Handle	104
MRB150GSA	Retractable	HVM Gas Strut Assisted 150NB	105
MRB150GSB	Retractable	HVM Gas Strut Assisted 150NB	105
MRB150GSC	Retractable	HVM Gas Strut Assisted 150NB	105
MRB90A	Retractable	HVM Manual 80NB Lifting Handle	104
MRB90B	Retractable	HVM Manual 80NB Lifting Handle	104
MRB80P	Retractable	HVM 80NB Power Drill Assisted	105
NB21B	Industrial	Sqaure 100 x 200 Baseplate	116
NB21FA	Industrial	Square 100 x 200 Fixed	116
P13AB	Card Reader	P Series Single Adjustable Baseplate	128
P13AF	Card Reader	P Series Single Adjustable Fixed	128
P1131B	Card Reader	P Series Single Baseplate	128
SB150BA	Steel	Supermkt 150NB Baseplate	45
SB80FA	Steel	Supermkt 80NB Screw-Down	45
SB100FA	Steel	Supermkt 100NB Screw-Down	45
SB150FA	Steel	Supermkt 150NB Screw-Down	45
SBB80B	Industrial	Builders Bollard 80NB Baseplate SS	122
SBB80F	Industrial	Builders Bollard 80NB Fixed SS	122
SBB80P	Industrial	Builders Bollard 80NB L&R SS	123
SBB80R	Industrial	Builders Bollard 80NB Retractable SS	123
SBB100B	Industrial	Builders Bollard 100NB Baseplate SS	122
SBB100F	Industrial	Builders Bollard 100NB Fixed SS	122
SBB125B	Industrial	Builders Bollard 125NB Baseplate SS	122
SBB125F	Industrial	Builders Bollard 125NB Fixed SS	122
SBB150B	Industrial	Builders Bollard 150NB Baseplate SS	122
SBB150F	Industrial	Builders Bollard 150NB Fixed SS	122
SBB150P	Industrial	Builders Bollard 150NB L&R SS	123

Product Code Index

Product Code	Product Group	Description	PAGE
SBB150R	Industrial	Builders Bollard 150NB Retractable SS	123
SCRB216B	Card Reader	Designer Series Rectangular Baseplate	132
SCRB500	Card Reader	M Series Single	131
SCRBDH500	Card Reader	M Series Double	131
SDH200	Retractable	VAC 200NB Hydraulic	109
SDH250	Retractable	VAC 250NB Hydraulic	109
SDM114	Retractable	VAC 100NB Manual Retractable	108
SDP168	Retractable	VAC Ø168 Automatic Pneumatic	109
SDP220	Retractable	VAC Ø220 Automatic Pneumatic	109
SDSA114	Retractable	VAC 100NB Semi Automatic	108
SDSA168	Retractable	VAC 150NB Semi Automatic	108
SDSA220	Retractable	VAC 200NB Semi Automatic	108
SERB820A	Retractable	Ø200 Electromechanical Retractable	110
SERB825A	Retractable	Ø254 Electromechanical Retractable	110
SERB825C	Security	Ø254 Electromechanical Retractable	97
SFDB90B	Steel	Guardsman 65NB Fold Down SS option	46
Shallow Mount	Security PAS68	Fixed Shallow Mount	92
SHCP80H	Industrial	Builders Bollard Sleeve with cover plate	121
SHCP150H	Industrial	Builders Bollard Sleeve with cover plate	121
SIR 1	Retractable	Siren Detector for Emergency Vehicles	111
SIRPI20B	Stainless Steel	Stainless Steel Sleeve Only	51
SL80R	Industrial	Builders Bollard Cast-in Sleeve	121
SL150R	Industrial	Builders Bollard Cast-in Sleeve	121
SMF1425	Installation	Shallow Mount Footing	70
SMF1435	Installation	Shallow Mount Footing	70
SMF2025	Installation	Shallow Mount Footing	71
SMF2035	Installation	Shallow Mount Footing	71
SMRB150A	Retractable	HVM Manual 150NB Lifting Handle	104
SMRB150B	Retractable	HVM Manual 150NB Lifting Handle	104
SMRB150GSA	Retractable	HVM Gas Strut Assisted 150NB	105
SMRB150GSB	Retractable	HVM Gas Strut Assisted 150NB	105
SMRB150GSC	Retractable	HVM Gas Strut Assisted 150NB	105
SMRB90A	Retractable	HVM Manual 80NB Lifting Handle	104
SMRB90B	Retractable	HVM Manual 80NB Lifting Handle	104
SMRB90C	Retractable	HVM Manual 80NB Lifting Handle	104
SMRB80P	Retractable	HVM 80NB Power Drill Assisted	105
SOV80B	Stainless Steel	Oval 80NB Baseplate	14
SOV80F	Stainless Steel	Oval 80NB Fixed	14
SOV80R	Stainless Steel	Oval 80NB L&R	14
SP100	Security PAS68	Retractable Semi-automactic	94
SP1010	Security PAS68	SP 1000 Fixed	96
SP1020	Security PAS68	SP1000 Shallow Mount Footing	96
SP1040	Security PAS68	SP1000 Automatic Retractable	96
SP150FA	Ram Raid	Sentinel 150NB Fixed	78
SP150FC	Ram Raid	Sentinel 150NB Fixed	78
SP150RA	Ram Raid	Sentinel 150NB L&R	78
SP150RC	Ram Raid	Sentinel 150NB L&R	78
SP410	Security PAS68	SP400 Fixed	95
SP420	Security PAS68	SP400 Shallow Mount Footing	95
SP430	Security PAS68	SP400 Manual Retractable	95
SP440	Security PAS68	SP400 Automatic Retractable	95
SP657B	Steel	65 Series Baseplate	47
SP657F	Steel	65 Series Fixed	47
SP657R	Steel	65 Series L&R	47
SP90F	Ram Raid	Sentinel 80NB Fixed	78
SP90R	Ram Raid	Sentinel 80NB L&R	78
SP90RWW	Ram Raid	Sentinel 80NB L&R	78
SPS90B	Steel	Warden 80NB L&R	46
SPS90BW	Steel	Warden 80NB With Wings L&R	46
SPTT	Security PAS68	Telescopic	93
SRO80B	Stainless Steel	Oval Regal 80NB Baseplate	15
SRO80F	Stainless Steel	Oval Regal 80NB Fixed	15
SRO80R	Stainless Steel	Oval Regal 80NB L&R	15
SSB80BA	Stainless Steel	Slimline 80NB Internal Baseplate	16
SSB80FA	Stainless Steel	Slimline 80NB Screw-down	16
SSB100BA	Stainless Steel	Slimline 100NB Internal Baseplate	16
SSB100FA	Stainless Steel	Slimline 100NB Screw-down	16
SSB150BAWW	Stainless Steel	Slimline 150NB Supermkt Fixed	18
SSB150FA	Stainless Steel	Slimline 150NB Screw-down Supermkt	18
SSDB12	Card Reader	Designer Series Square Slant Baseplate	133
SSL1032	Security PAS68	SP1000 Optional Stainless Steel Sleeve	96
SSL150B2	Lighting	Slimline 150NB Slotted 180_ Baseplate	58
SSL150B3	Lighting	Slimline 150NB Slotted 360_ Baseplate	58
SSL150B4	Lighting	Slimline 150NB Square 180_ Baseplate	58
SSL150B5	Lighting	Slimline 150NB Square 360_ Baseplate	58
SSL150F2	Lighting	Slimline 150NB Slotted 180_ Fixed	58
SSL150F3	Lighting	Slimline 150NB Slotted 360_ Fixed	58
SSL150F4	Lighting	Slimline 150NB Square 180_ Fixed	58
SSL150F5	Lighting	Slimline 150NB Square 360_ Fixed	58
SSL150FB	Lighting	Slimline 150NB Slotted Fixed	58
SSL150FB	Lighting	Slimline 150NB Square 180_ Fixed	58
SSL150FC	Lighting	Slimline 150NB Slotted Fixed	58
SSL150FC	Lighting	Slimline 150NB Square 360_ Fixed	58
SSL412	Security PAS68	SP400 Optional Stainless Steel Sleeve	95
SSL80B2	Lighting	Slimline 80NB Slotted 180_ Baseplate	59
SSL80B3	Lighting	Slimline 80NB Slotted 360_ Baseplate	59
SSL80F2	Lighting	Slimline 80NB Slotted 180_ Fixed	59
SSL80F3	Lighting	Slimline 80NB Slotted 360_ Fixed	59
SSL110BSOL	Lighting	Solar Baseplate Stainless Steel	60
SSL110FSOL	Lighting	Solar Fixed Stainless Steel	60
SSM151B	Stainless Steel	Breeze Baseplate	23
SSM152B	Stainless Steel	Wave Baseplate	23

Product Code Index

Product Code	Product Group	Description	PAGE
SSM153B	Stainless Steel	Corso Baseplate	25
SSM153F	Stainless Steel	Corso Fixed	25
SSM154B	Stainless Steel	Corso Baseplate	25
SSM154F	Stainless Steel	Corso Fixed	25
SSM200B	Stainless Steel	Smart 200NB Bollard	26
SSP80BA	Stainless Steel	Slimline 80NB Baseplate	16
SSP100BA	Stainless Steel	Slimline 100NB Baseplate	17
SSP100FA	Stainless Steel	Slimline 100NB Fixed	17
SSP125BA	Stainless Steel	Slimline 125NB Baseplate	17
SSP125FA	Stainless Steel	Slimline 125NB Fixed	17
SSP125FSC	Security PAS68	Barrier Infill 125NB Fixed	87
SSP125RA	Stainless Steel	Slimline 125NB L&R	17
SSP125RSC	Security PAS68	Barrier Infill 125NB L&R	87
SSP150BA	Stainless Steel	Slimline 150NB Baseplate	18
SSP150FA	Stainless Steel	Slimline 150NB Fixed	18
SSP150FB	Stainless Steel	Slimline 150NB Fixed	18
SSP150FC	Stainless Steel	Slimline 150NB Fixed	18
SSP150FP68A	Security	Barrier Infill 150NB Fixed	87
SSP150FP68B	Security	Barrier Infill 150NB Fixed	87
SSP150FP68C	Security	Barrier Infill 150NB Fixed	87
SSP150FS	Stainless Steel	Signage 150NB Bollard	27
SSP150FSC	Security	Barrier Infill 150NB Fixed	87
SSP150PF	Card Reader	Designer Series Regal 150NB Baseplate	133
SSP200PF	Card Reader	Designer Series Regal 200NB Baseplate	133
SSP150RA	Stainless Steel	Slimline 150NB L&R	18
SSP150RB	Stainless Steel	Slimline 150NB L&R	18
SSP150RC	Stainless Steel	Slimline 150NB L&R	18
SSP150RSC	Security	Barrier Infill 150NB L&R	87
SSP150TA	Stainless Steel	Slimline 150NB Traffic Lights Fixed	18
SSP150TB	Stainless Steel	Slimline 150NB Traffic Lights Fixed	18
SSP150TC	Stainless Steel	Slimline 150NB Traffic Lights Fixed	18
SSP151FS	Stainless Steel	Signage 150NB Bollard	27
SSP200BA	Stainless Steel	Slimline 200NB Baseplate	19
SSP200FA	Stainless Steel	Slimline 200NB Fixed	19
SSP200FB	Stainless Steel	Slimline 200NB Fixed	19
SSP200FC	Stainless Steel	Slimline 200NB Fixed	19
SSP300BA	Stainless Steel	Slimline 300NB Baseplate	19
SSP300BB	Stainless Steel	Slimline 300NB Baseplate	19
SSP300FA	Stainless Steel	Slimline 300NB Fixed	19
SSP300FB	Stainless Steel	Slimline 300NB Fixed	19
SSP300FC	Stainless Steel	Slimline 300NB Fixed	19
SSP80FA	Stainless Steel	Slimline Screw-down Supermkt	16
SSP80FB	Stainless Steel	Slimline 80NB Fixed	16
SSP80FC	Stainless Steel	Slimline 80NB Fixed	16
SSP80RA	Stainless Steel	Slimline 80NB L&R	16
SSP80RAS	Stainless Steel	Slimline 80NB NSW DofE L&R	16
SSP80RB	Stainless Steel	Slimline 80NB L&R	16
SSP80RC	Stainless Steel	Slimline 80NB L&R	16
SSR100BA	Stainless Steel	Regal 100NB Baseplate	20
SSR100FA	Stainless Steel	Regal 100NB Fixed	20
SSR125BA	Stainless Steel	Regal 125NB Baseplate	21
SSR125FA	Stainless Steel	Regal 125NB Fixed	21
SSR125RA	Stainless Steel	Regal 125NB L&R	21
SSR150BA	Stainless Steel	Regal 150NB Baseplate	21
SSR150FA	Stainless Steel	Regal 150NB Fixed	21
SSR150FAS	Stainless Steel	Smokers Bollard 150NB Baseplate	27
SSR150FB	Stainless Steel	Regal 150NB Fixed	21
SSR150FC	Stainless Steel	Regal 150NB Fixed	21
SSR150RA	Stainless Steel	Regal 150NB L&R	21
SSR150RB	Stainless Steel	Regal 150NB L&R	21
SSR150RC	Stainless Steel	Regal 150NB L&R	21
SSR200BA	Stainless Steel	Regal 200NB Baseplate	22
SSR200FA	Stainless Steel	Regal 200NB Fixed	22
SSR200FB	Stainless Steel	Regal 200NB Fixed	22
SSR200FC	Stainless Steel	Regal 200NB Fixed	22
SSR300BA	Stainless Steel	Regal 300NB Baseplate	22
SSR300FA	Stainless Steel	Regal 300NB Fixed	22
SSR300FB	Stainless Steel	Regal 300NB Fixed	22
SSR300FC	Stainless Steel	Regal 300NB Fixed	22
SSR80BA	Stainless Steel	Regal 80NB Baseplate	20
SSR80FA	Stainless Steel	Regal 80NB Fixed	20
SSR80FB	Stainless Steel	Regal 80NB Fixed	20
SSR80FC	Stainless Steel	Regal 80NB Fixed	20
SSR80RA	Stainless Steel	Regal 80NB L&R	20
SSR80RB	Stainless Steel	Regal 80NB L&R	20
SSR80RC	Stainless Steel	Regal 80NB L&R	20
SSRB80FA	Stainless Steel	Regal 80NB Screw-down Supermkt	20
SSS150FA	Stainless Steel	Stainless Steel Sleeve Only	18
SSS150FA	Security	Slimline Profile Stainless Steel Sleeve	83
SSS150FA	Security	Stainless Steel Sleeve Only	87
SSS150FB	Stainless Steel	Stainless Steel Sleeve Only	18
SSS150FB	Security	Slimline Profile Stainless Steel Sleeve	83
SSS150FB	Security	Stainless Steel Sleeve Only	87
SSS200FA	Stainless Steel	Stainless Steel Sleeve Only	19
SSS200FA	Security	Slimline Profile Stainless Steel Sleeve	83
SSS200FA	Security	Stainless Steel Sleeve Only	87
SSS200FB	Stainless Steel	Stainless Steel Sleeve Only	19
SSS200FB	Security	Slimline Profile Stainless Steel Sleeve	83
SSS200FB	Security	Stainless Steel Sleeve Only	87
SSS300FA	Stainless Steel	Stainless Steel Sleeve Only	19
SSS300FA	Security	Slimline Profile Stainless Steel Sleeve	83
SSS300FB	Stainless Steel	Stainless Steel Sleeve Only	19

Product Code Index

Product Code	Product Group	Description	PAGE
SSS300FB	Security	Slimline Profile Stainless Steel Sleeve	83
SSSR150FA	Stainless Steel	Stainless Steel Sleeve Only	21
SSSR150FA	Security	Regal Profile Stainless Steel Sleeve	83
SSSR150FB	Stainless Steel	Stainless Steel Sleeve Only	21
SSSR150FB	Security	Regal Profile Stainless Steel Sleeve	83
SSSR200FA	Stainless Steel	Stainless Steel Sleeve Only	22
SSSR200FA	Security	Regal Profile Stainless Steel Sleeve	83
SSSR200FB	Stainless Steel	Stainless Steel Sleeve Only	22
SSSR200FB	Security	Regal Profile Stainless Steel Sleeve	83
SSSR300FA	Stainless Steel	Stainless Steel Sleeve Only	22
SSSR300FA	Security	Regal Profile Stainless Steel Sleeve	83
SSSR300FB	Stainless Steel	Stainless Steel Sleeve Only	22
SSSR300FB	Security	Regal Profile Stainless Steel Sleeve	83
SST151B	Stainless Steel	Rectangular Baseplate	24
SST151F	Stainless Steel	Rectangular Fixed	24
SST151R	Stainless Steel	Rectangular L&R	24
SST11B	Stainless Steel	Square 100 x 100 Baseplate	24
SST11F	Stainless Steel	Square 100 x 100 Fixed	24
SST11R	Stainless Steel	Square 100 x 100 L&R	24
SST1515B	Stainless Steel	Square 150 x 150 Baseplate	24
SST1515F	Stainless Steel	Square 150 x 150 Fixed	24
SST1515R	Stainless Steel	Square 150 x 150 L&R	24
STBR01B	Industrial	Round 125NB Tap Bollard Baseplate	118
STBR01F	Industrial	Round 125NB Tap Bollard Fixed	118
STBR02B	Industrial	Round 125NB Tap Bollard Baseplate	118
STBR02F	Industrial	Round 125NB Tap Bollard Fixed	118
STBR27FHW	Timber	H'wood Rd Cap & Strap	34
STBS01B	Industrial	Square 125NB Tap Bollard Baseplate	118
STBS01F	Industrial	Square 125NB Tap Bollard Fixed	118
STBS02B	Industrial	Square 125NB Tap Bollard Baseplate	118
STBS02F	Industrial	Square 125NB Tap Bollard Fixed	118
STBS22FHW	Timber	H'wood Rd Cap & Strap	34
STPB103B	Power	Titan 200NB Single Door	124
STPB120B	Power	Titan 200NB Double Door	124
STPB230B	Power	Titan 300NB Double Door	124
STPB30B	Power	Titan 300NB Single Door	124
STPB40B	Power	Titan 400NB Single Door	125
STPB60B	Power	Titan 600NB Single Door	125
SURB2150B	Timber	Urban 2100 Stainless Steel Baseplate	33
SURB2150F	Timber	Urban 2100 Stainless Steel Fixed	33
SURB2LA	Lighting	Urban Square Light Baseplate	61
SURB2LB	Lighting	Urban Round Light Baseplate	61
SURB2LC	Lighting	Urban Slot Light Baseplate	61
SURB4150B	Timber	Urban 4100 Stainless Steel Baseplate	33
SURB4150F	Timber	Urban 4100 Stainless Steel Fixed	33
TBR01B	Industrial	Round 125NB Tap Bollard Baseplate	118
TBR01F	Industrial	Round 125NB Tap Bollard Fixed	118
TBR02B	Industrial	Round 125NB Tap Bollard Baseplate	118
TBR02F	Industrial	Round 125NB Tap Bollard Fixed	118
TBR27FHW	Timber	Hardwood Round Fixed	34
TBS01B	Industrial	Square Tap Bollard Baseplate	118
TBS01F	Industrial	Square Tap Bollard Fixed	118
TBS02B	Industrial	Square Tap Bollard Baseplate	118
TBS02F	Industrial	Square Tap Bollard Fixed	118
TBS22FHW	Timber	Hardwood Square Fixed	34
THB600	Power	Titan THB Series Hinged	126
THB800	Power	Titan THB Series Hinged	126
TOP 25	Retractable	Cover for Foundation Box	111
TPB103B	Power	Titan 200NB Single Door	124
TPB120B	Power	Titan 200NB Double Door	124
TPB230B	Power	Titan 300NB Double Door	124
TPB30B	Power	Titan 300NB Single Door	124
TPB40B	Power	Titan 400NB Single Door	125
TPB60B	Power	Titan 600NB Single Door	125
TV300	Power	Titan TV Series Vertical	127
TV400	Power	Titan TV Series Vertical	127
TV800	Power	Titan TV Series Vertical	127
URB100ASWM	Stainless Steel	Smokers Bollard 90NB Butt Bin	27
URB2150B	Timber	Urban 2100 Baseplate	33
URB2150F	Timber	Urban 2100 Fixed	33
URB2LA	Lighting	Urban Square Light Baseplate	61
URB2LB	Lighting	Urban Round Light Baseplate	61
URB2LC	Lighting	Urban Slot Light Baseplate	61
URB4150B	Timber	Urban 4100 Baseplate	33
URB4150F	Timber	Urban 4100 Fixed	33
WCB265F	Pre-cast Concrete	Windsor 80NB Fixed	37
WCB267F	Pre-cast Concrete	Windsor 80NB Fixed	37
WS16	Industrial	Pre-cast Concrete Wheel Stops	136
WS20	Industrial	Pre-cast Concrete Wheel Stops	136
WSR16	Industrial	Rubber Wheel Stops	136
WSR20	Industrial	Rubber Wheel Stops	136
XP90F	Ram Raid	Super XP 80NB Fixed	79
XP90FGG	Ram Raid	Super XP 80NB Fixed	79
XP90R	Ram Raid	Super XP 80NB L&R	79
XP90RGG	Ram Raid	Super XP 80NB L&R	79

SecuraPost

YOUR LEDA CUSTOMER EXPERIENCE IS END-TO-END.

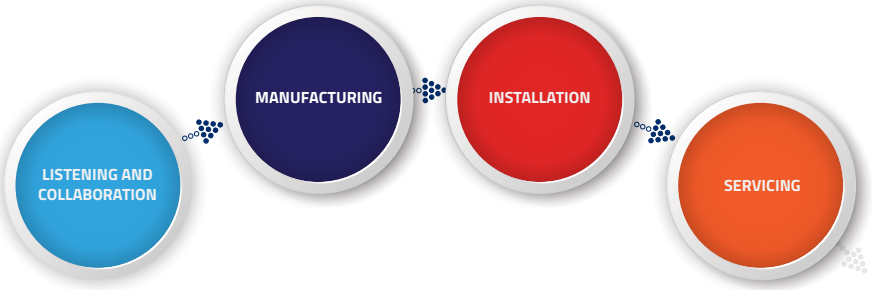

Need product advice, information or further technical resources ?

Call Leda now on

1300 780 450

(business hours)

Other Leda Publications

Bicycle Parking Handbook

Industrial Gates + Perimeter Security Handbook

Doors & Loading Dock Product Handbook

Copyright © Leda Security Products Pty Ltd 2017.
Product specifications displayed in this Handbook are accurate at time of printing.
Improvements and additions are continually being made to the product range.
Check with your nearest Leda Sales office that the designs and specifications displayed are still current.
Comprehensive brochures and technical literature on the complete range of Leda's architectural and security products are available on request or visit the website: www.ledasecurity.com.au.

SecuraPost

LEDA
PERIMETER SECURITY PRODUCTS

Leda Security Products Pty Ltd
ABN 23 067 258 235

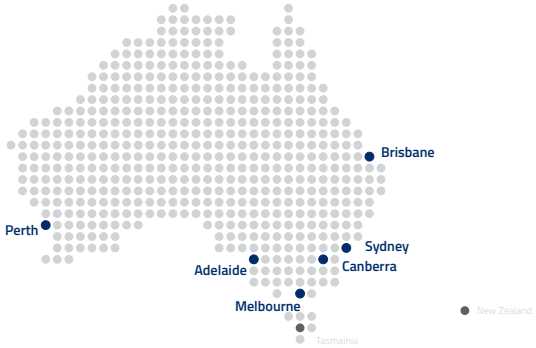

1300 780 450

ledasecurity.com.au

Head Office & Manufacturing

NSW - Tuggerah
18 Reliance Drive,
Tuggerah NSW 2259
PO Box 5196
Chittaway Bay 2261
Tel: (02) 8413 3430
Fax: (02) 4353 2255

SALES BRANCHES

Email: sales@ledasecurity.com.au

New South Wales

8 Ferris Street
North Parramatta
NSW 2151
Tel: (02) 8413 3410

Queensland

3/3375 Pacific Highway
Slacks Creek
QLD 4127
Tel: (07) 3613 8270

Victoria

67 Calarco Drive
Derrimut
VIC 3030
Tel: (03) 8399 8150

South Australia

19 Taminga Street
Regency Park
SA 5010
Tel: (08) 8374 3266

Western Australia

14 Kenhelm Street
Balcatta
WA 6021
Tel: (08) 9406 3650

Australasian distributors and resellers in Northern Territory, Tasmania and New Zealand.

Distributed by

Leda Security is now part of

ARA BUILDING SERVICES